DESIGN AND DEVELOPMENT OF A SUPERSONIC GAS TARGET SYSTEM

Antonios Kontos
University of Notre Dame
Joint Institute for Nuclear Astrophysics

ST. GEORGE RECOIL MASS SEPARATOR

- Study of (α,γ) reactions.
- High intensity beams.
- Angular distribution measurements.
- Better mass separation than extended target.
- Adjustable target thickness.
- Other gases possible.

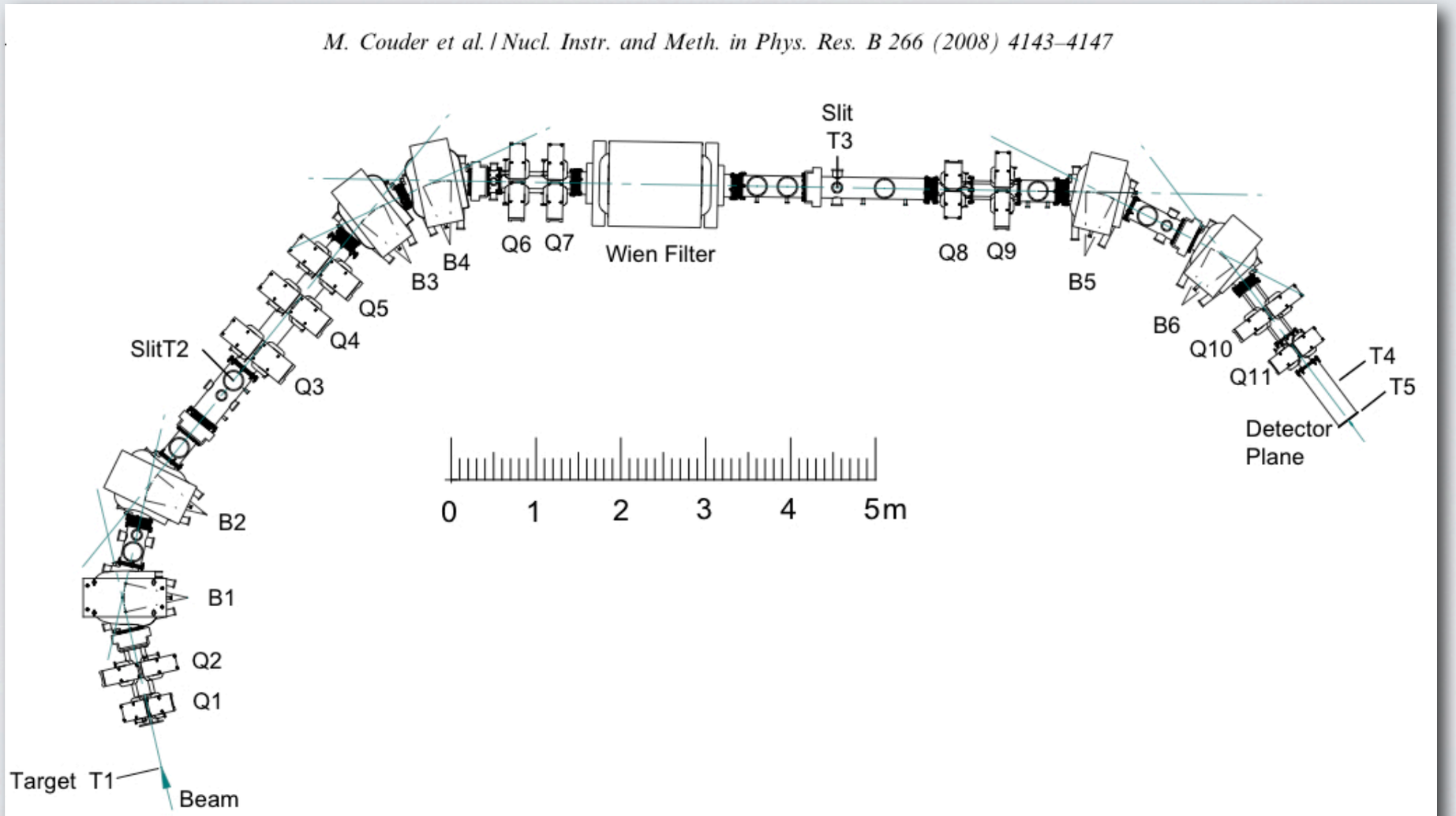

Fig. 1. Layout of the St. George recoil separator.

ST. GEORGE RECOIL MASS SEPARATOR

- Study of (α,γ) reactions.
- High intensity beams.
- Angular distribution measurements.

- Better mass separation than extended target.
- Adjustable target thickness.
- Other gases possible.

Fig. 1. Layout of the St. George recoil separator.

A CLOSE LOOK AT A JET

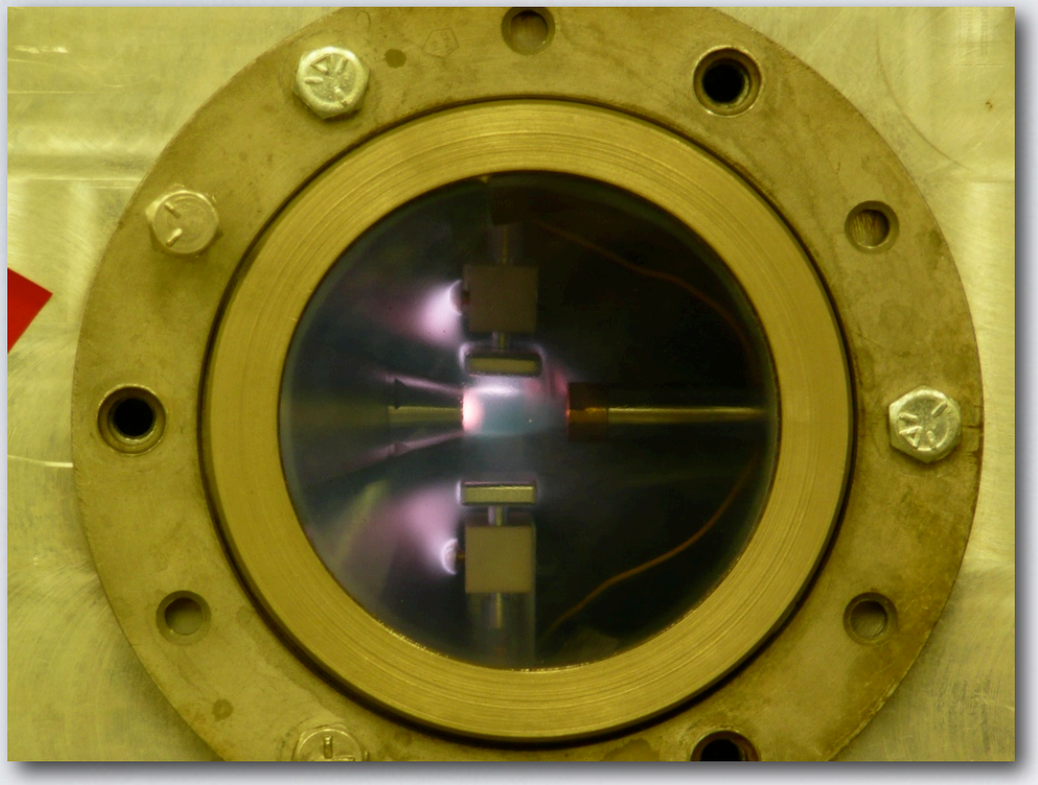

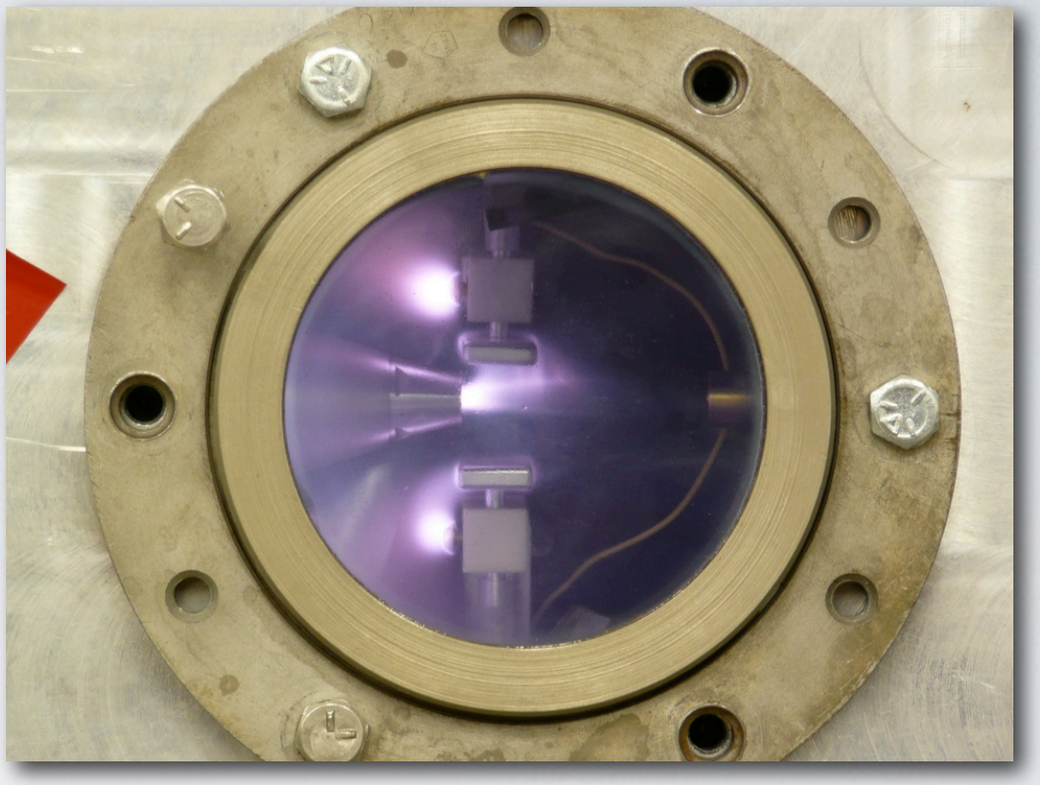

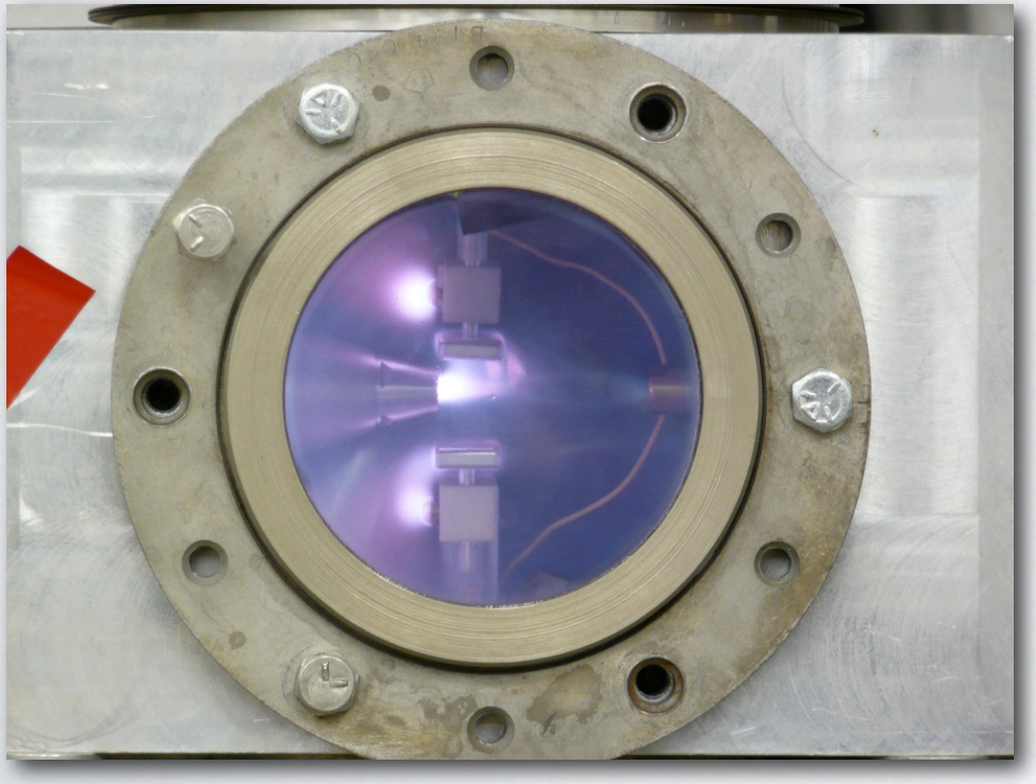

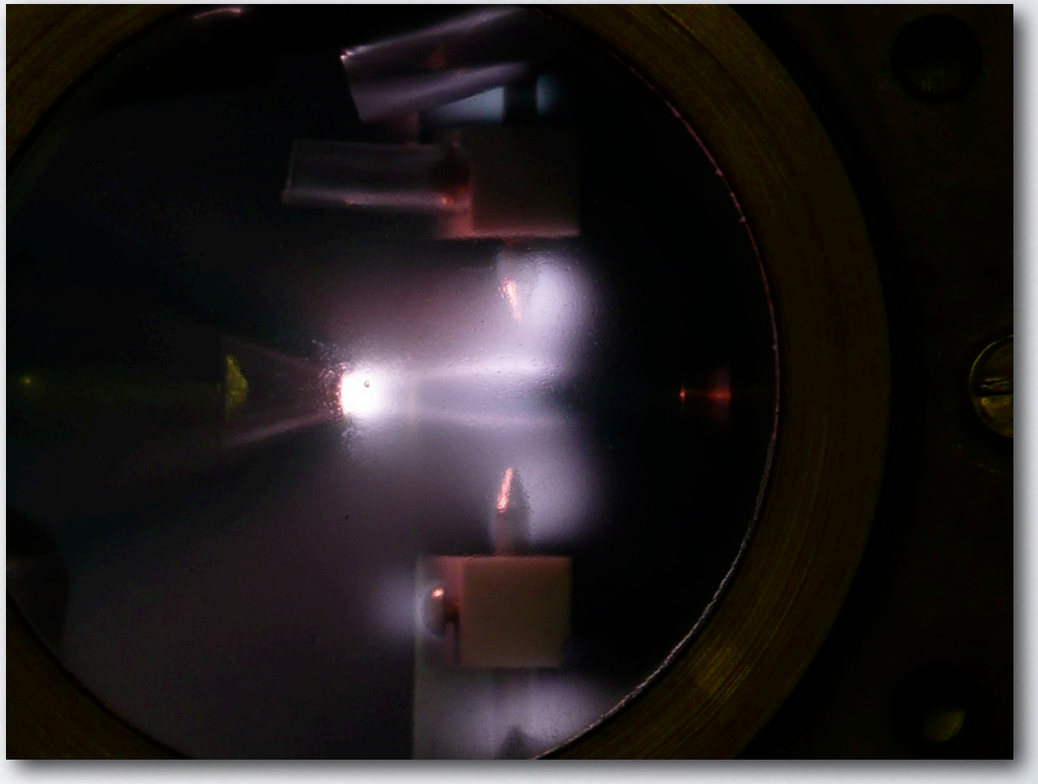

GAS TARGET OUTLINE

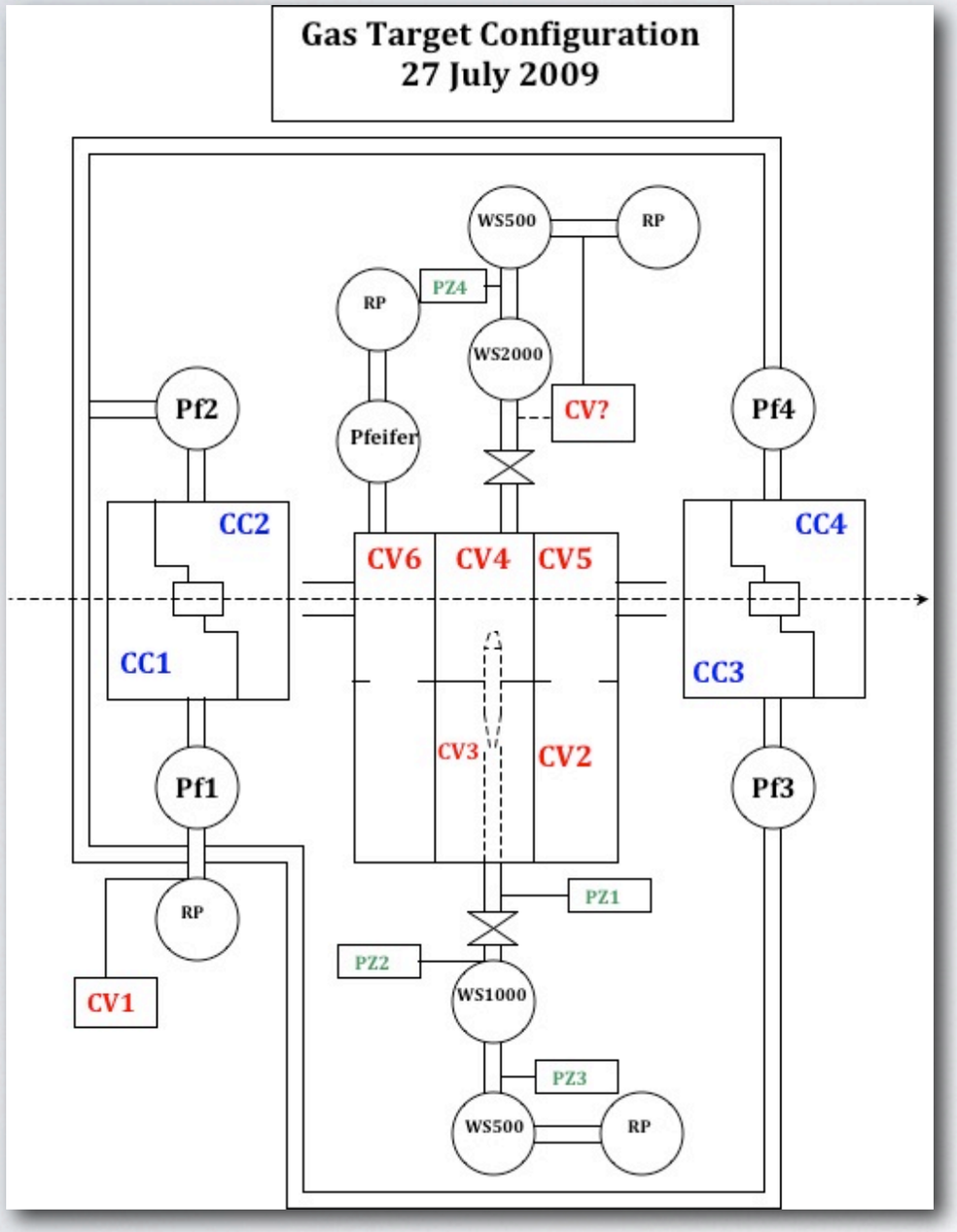

- A total of 7 pumping stages.
- 5 Turbo-molecular pumps & 4 Roots Blowers.
- Compact design, allowing for gamma ray detection set-up in close geometry.
- Large angular acceptance(±40 mrad)

GAS TARGET CHARACTERIZATION

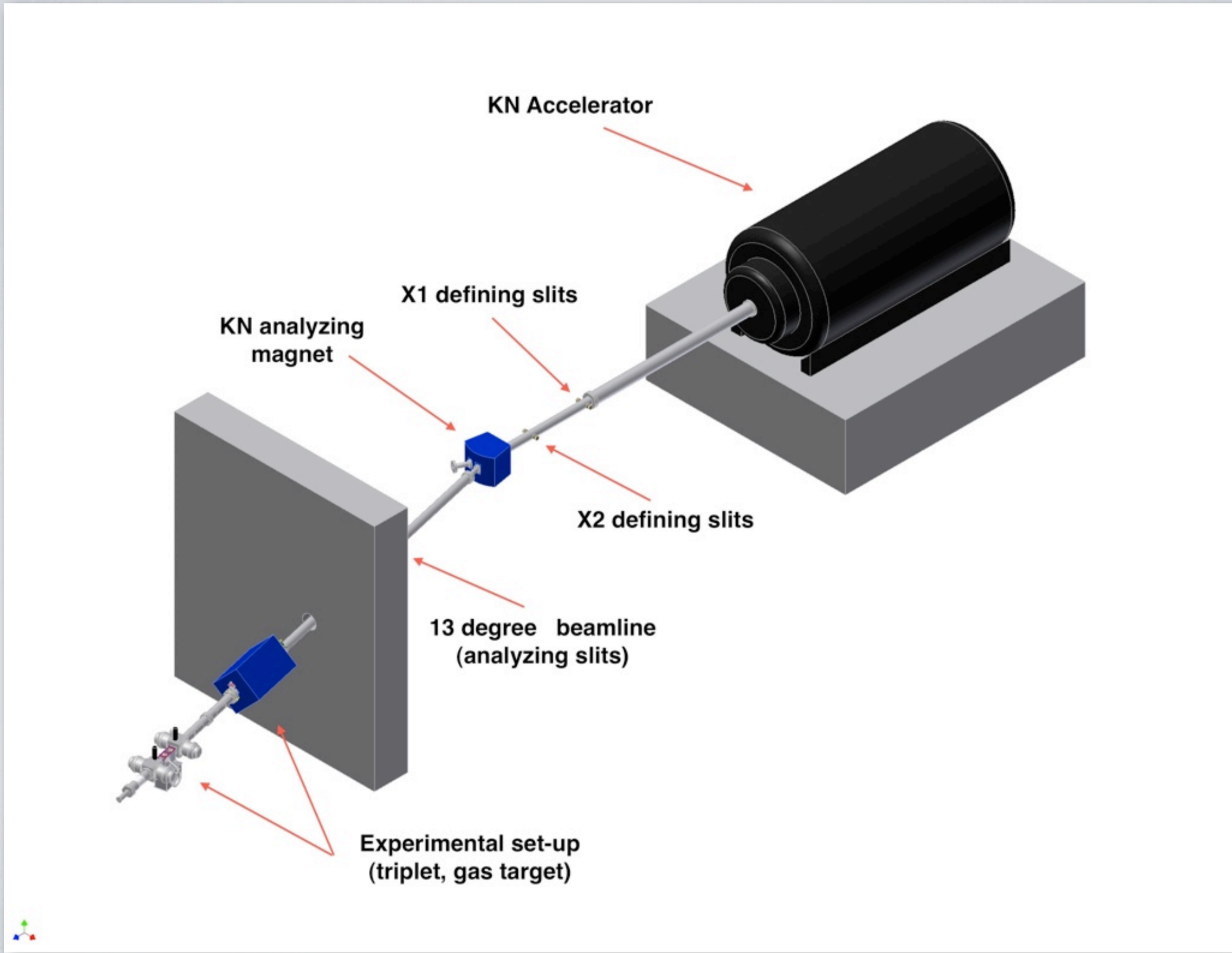

GAS TARGET CHARACTERIZATION

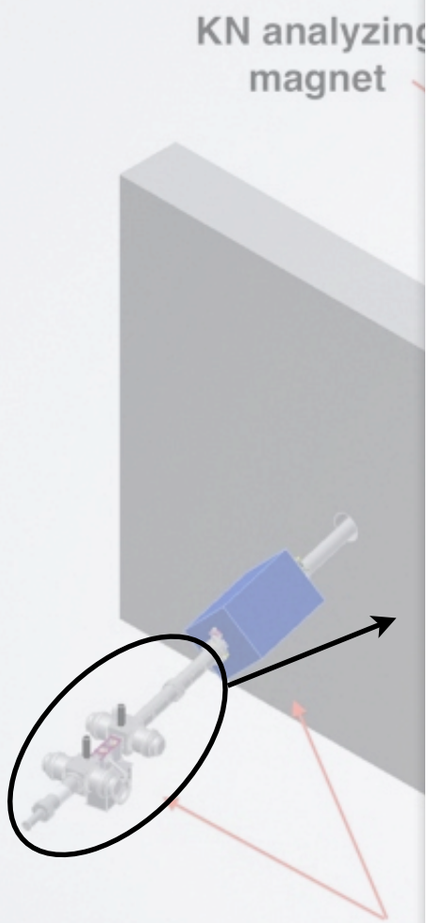

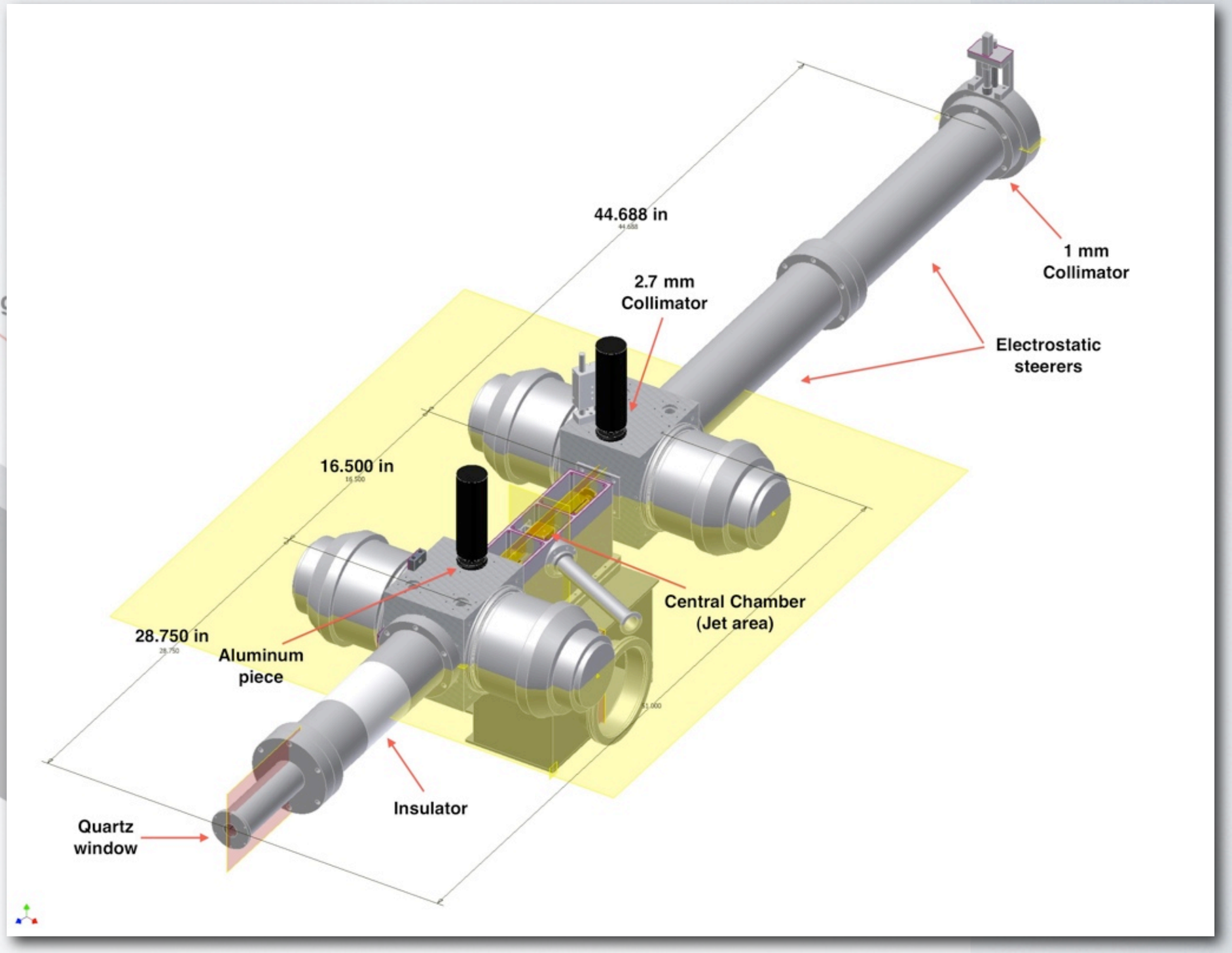

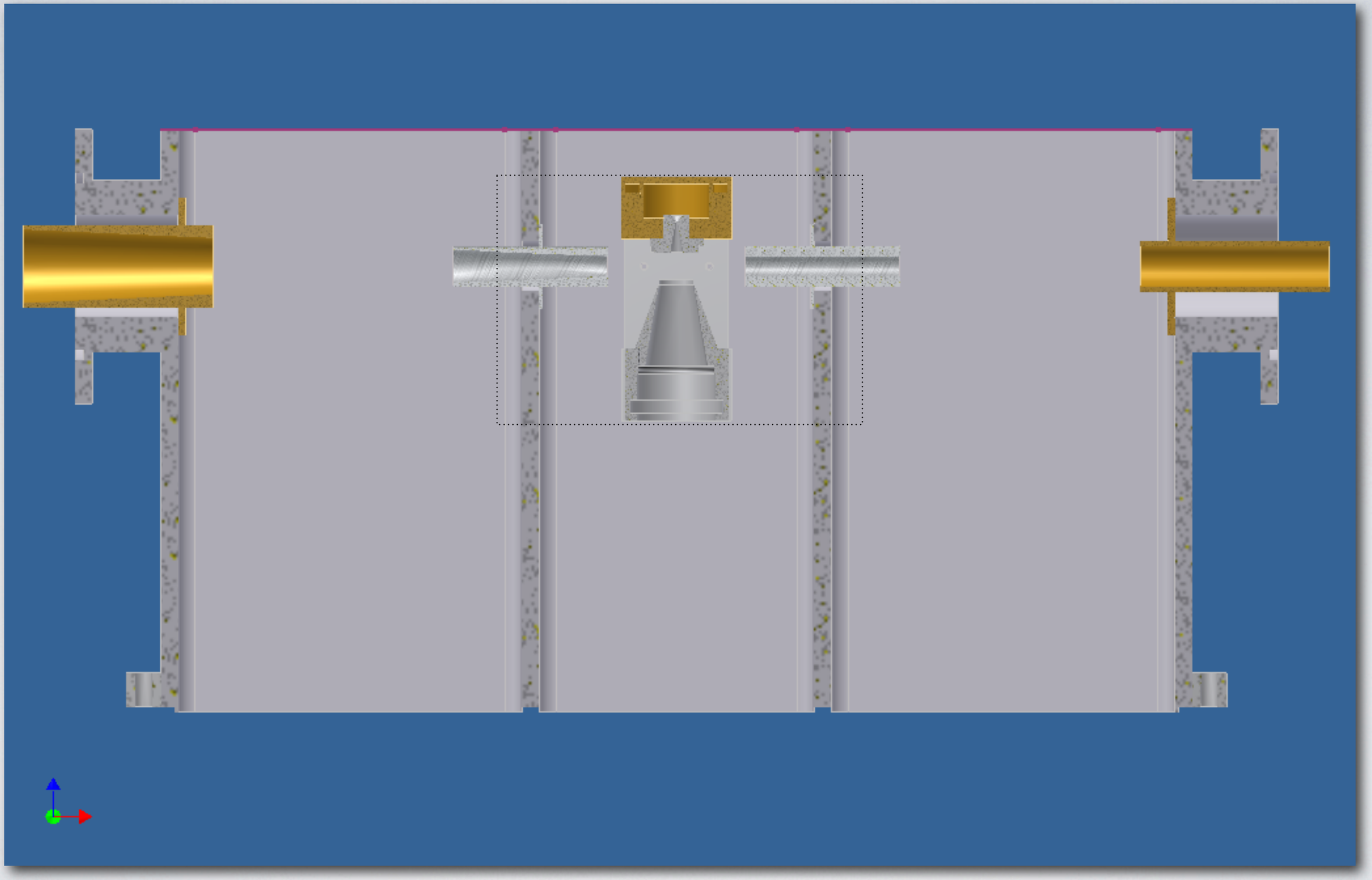

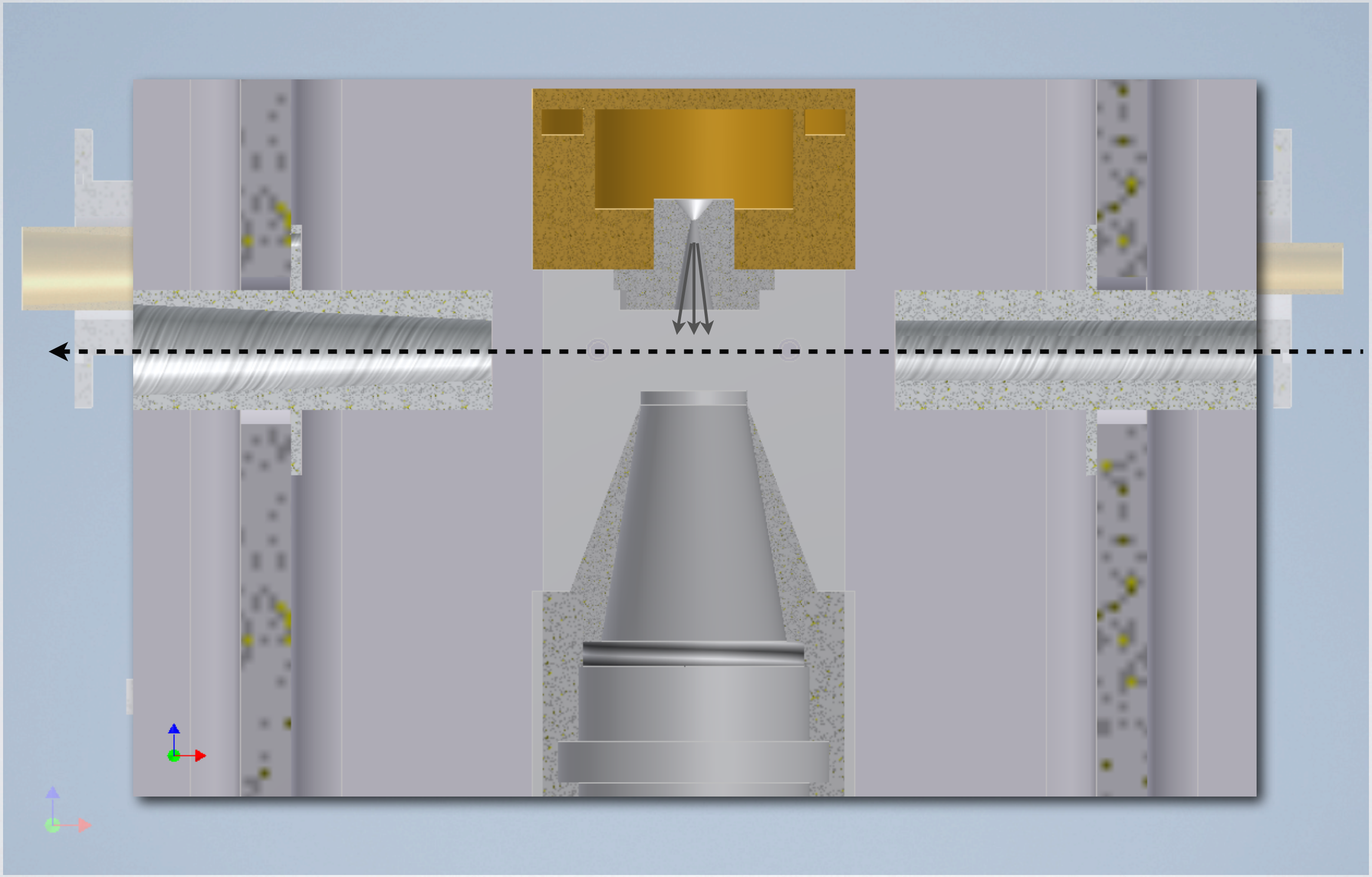

GAS TARGET CHARACTERIZATION

-Elastic scattering Method

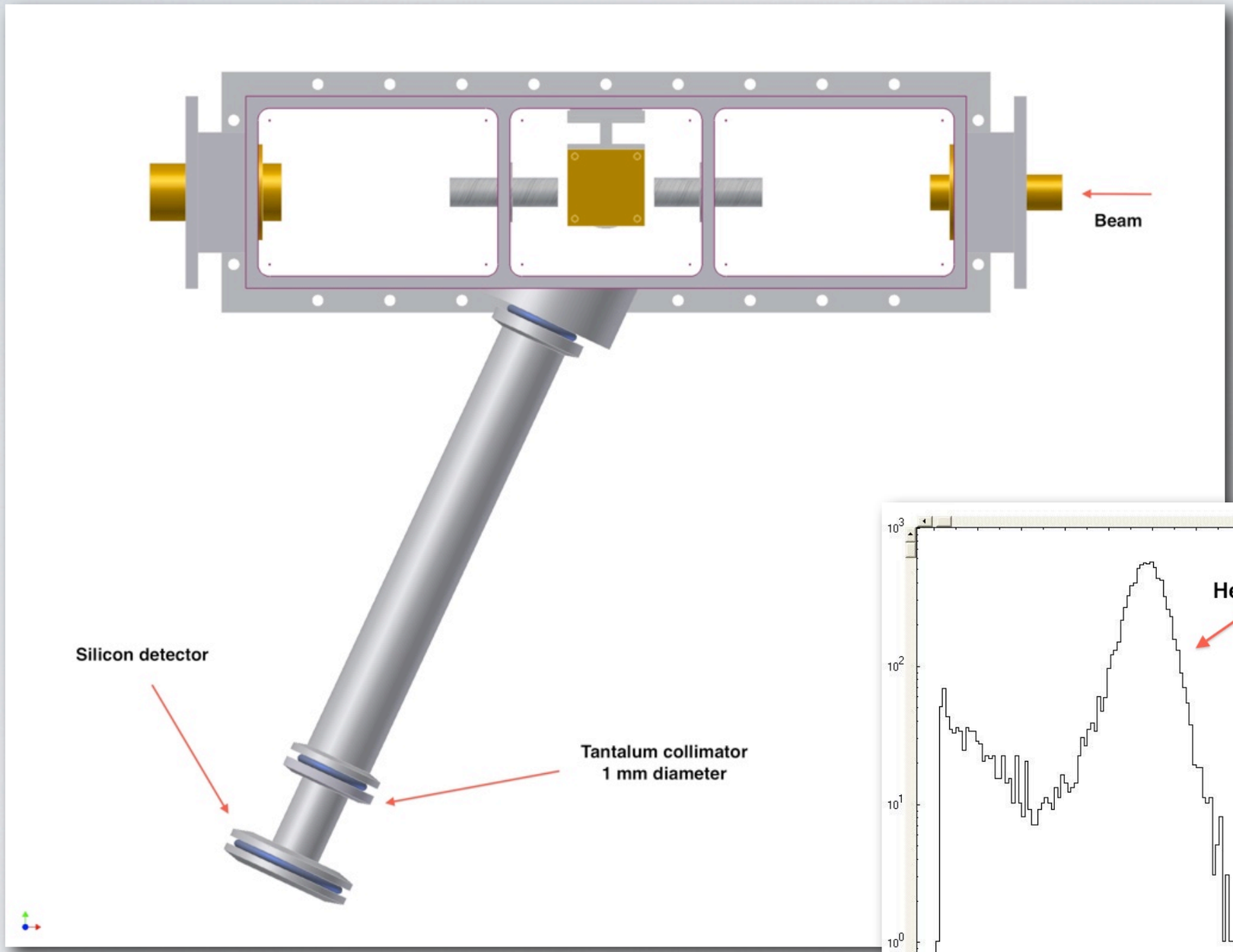

^{20}Ne + ^{4}He scattering
@ 2 MeV

^{3}He + ^{4}He scattering
@ 1 MeV

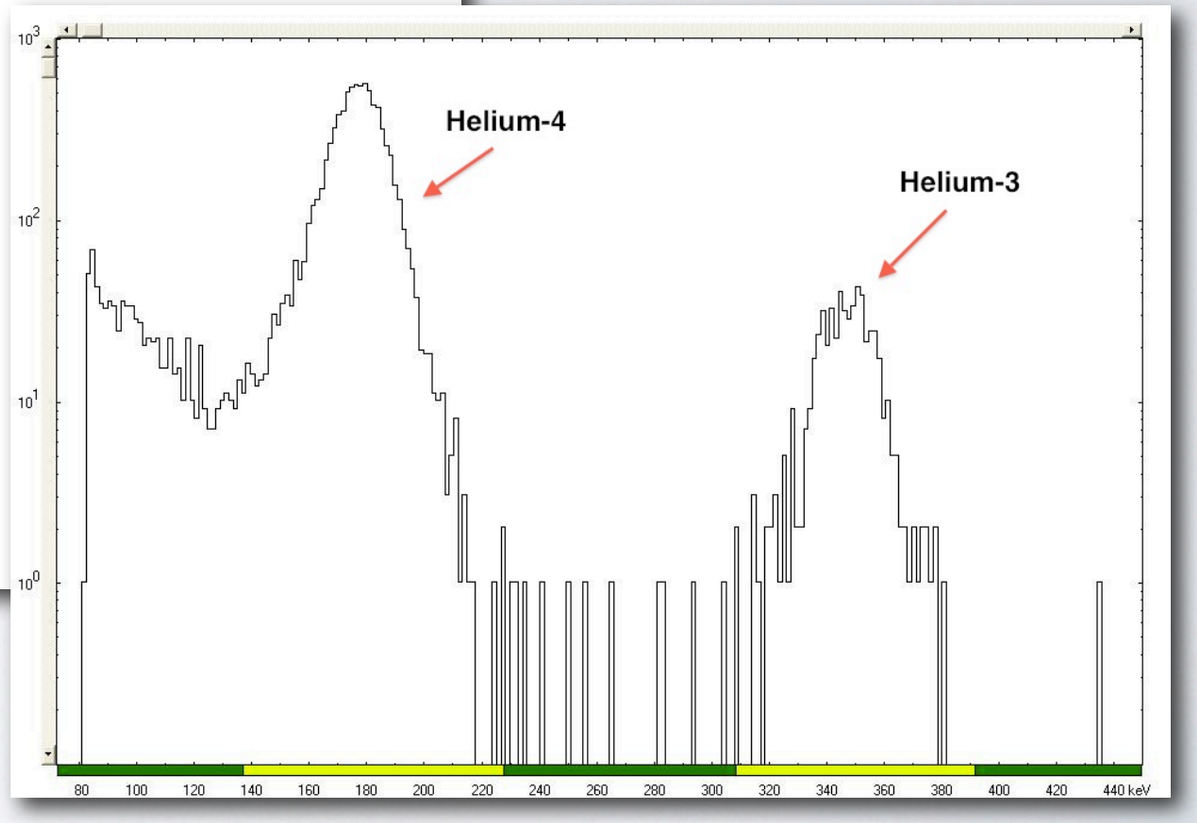

GAS TARGET CHARACTERIZATION

-Elastic scattering Method

$^{20}Ne + {}^{4}He$ scattering
@ 2 MeV

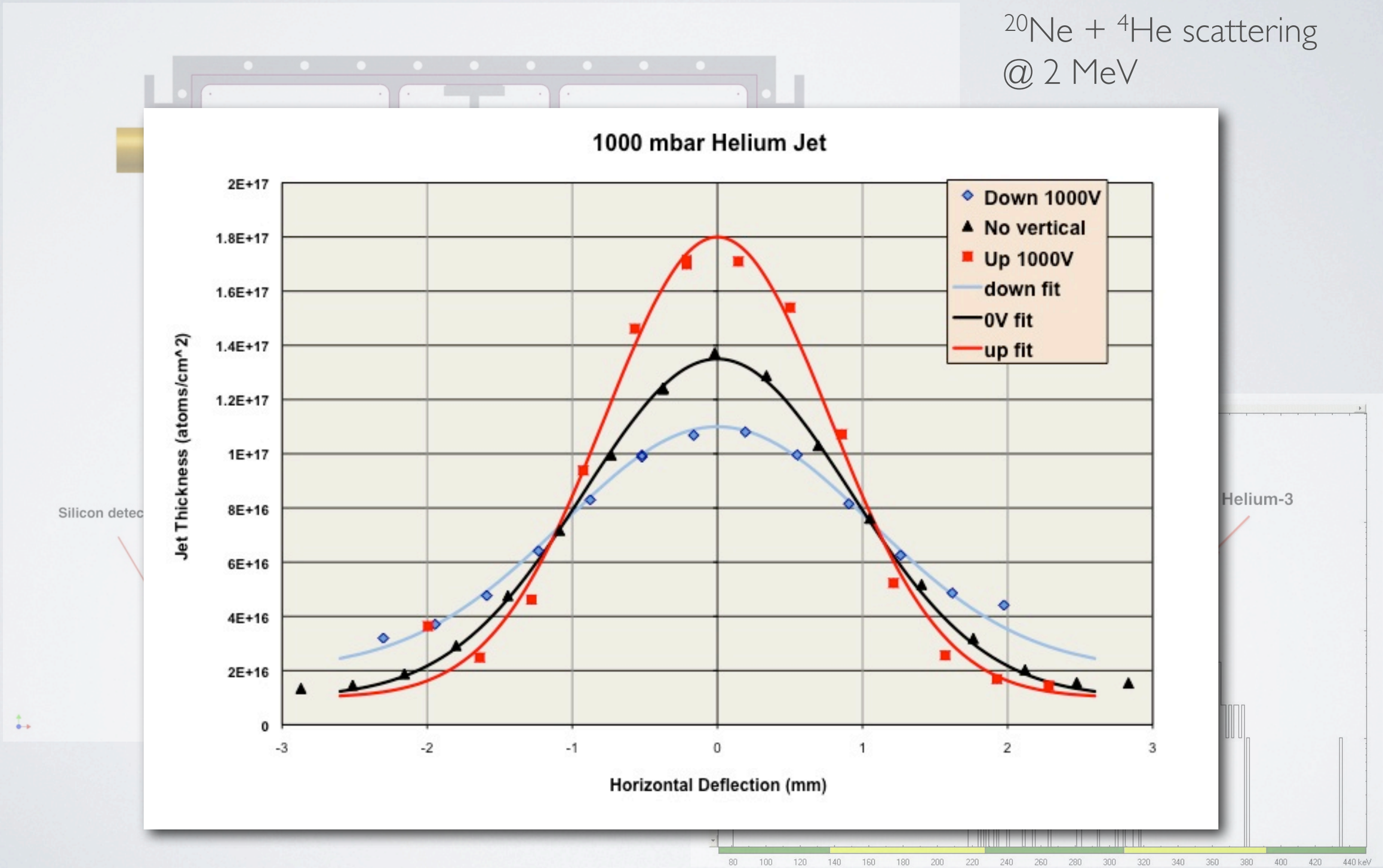

GAS TARGET CHARACTERIZATION

-Energy Loss Method

- Measurement of the excitation curve of a resonance with and without gas.
- Energy shift of the front edge indicates the energy loss suffered from the beam due to the gas.

$^{15}N(\alpha,\gamma)$ @ 1.68 MeV

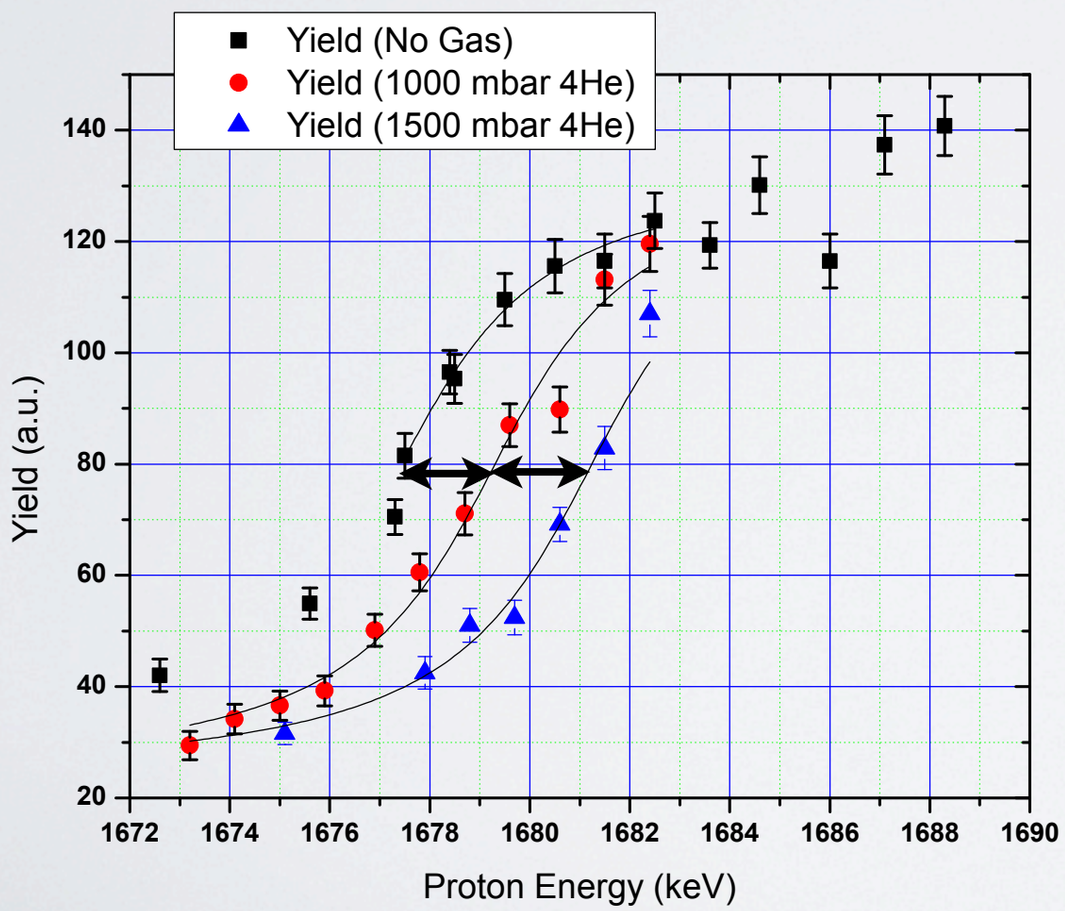

$^{27}Al(p,\gamma)$ @ 992 keV

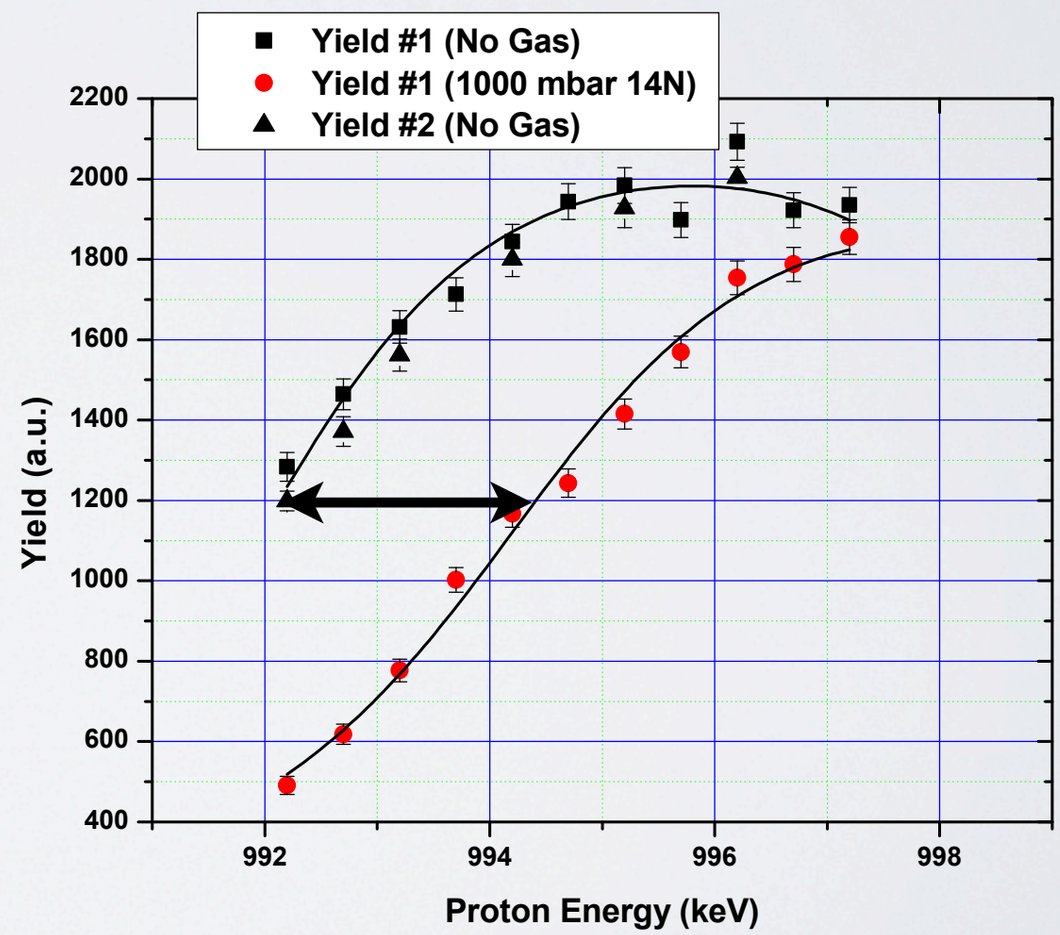

RESULTS

- Helium jet thickness @ 1500 mbar:
  - 1st method: $(2.42\pm0.24)\times10^{17}$ atoms/cm^2.
  - 2nd method: $(2.83\pm0.43)\times10^{17}$ atoms/cm^2.
- Outer chamber pressure @ 1500 mbar:
  - $\sim10^{-5}$ mbar (helium).
- Jet size: 2-3 mm diameter.
- Estimated 5-10% of target thickness coming from helium gas outside of the jet.

FUTURE

- Recirculation.
- Higher pressures.
- Characterization of the jet using a reaction.

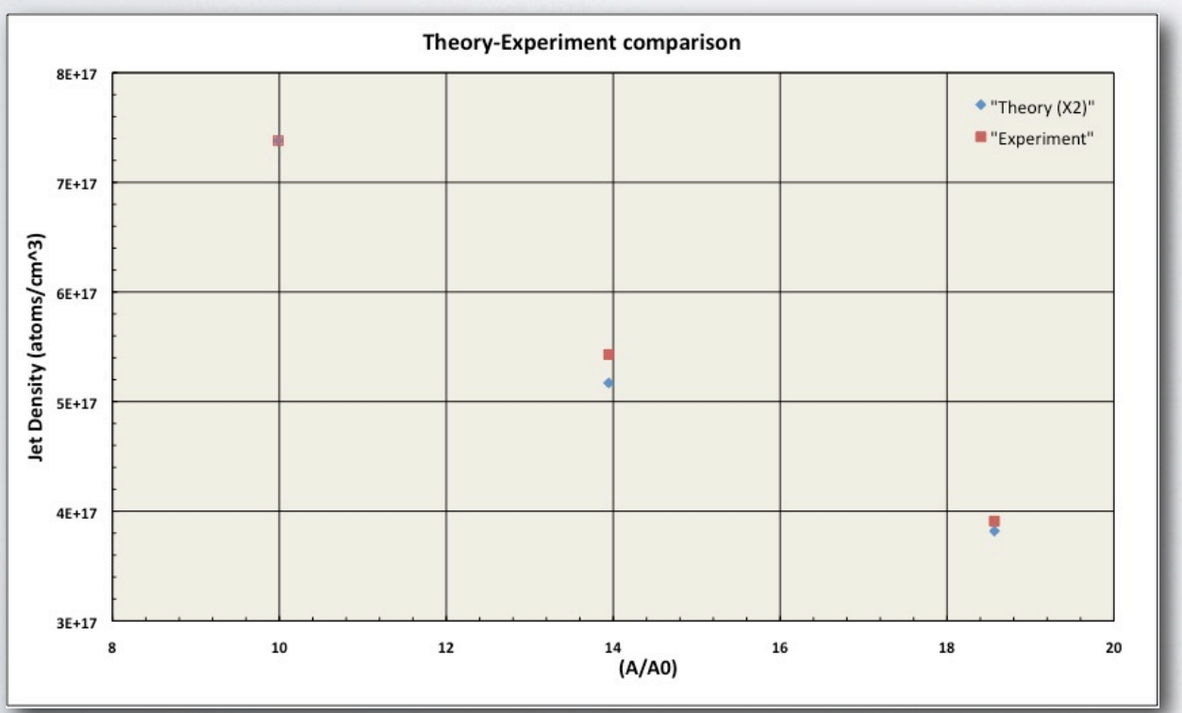

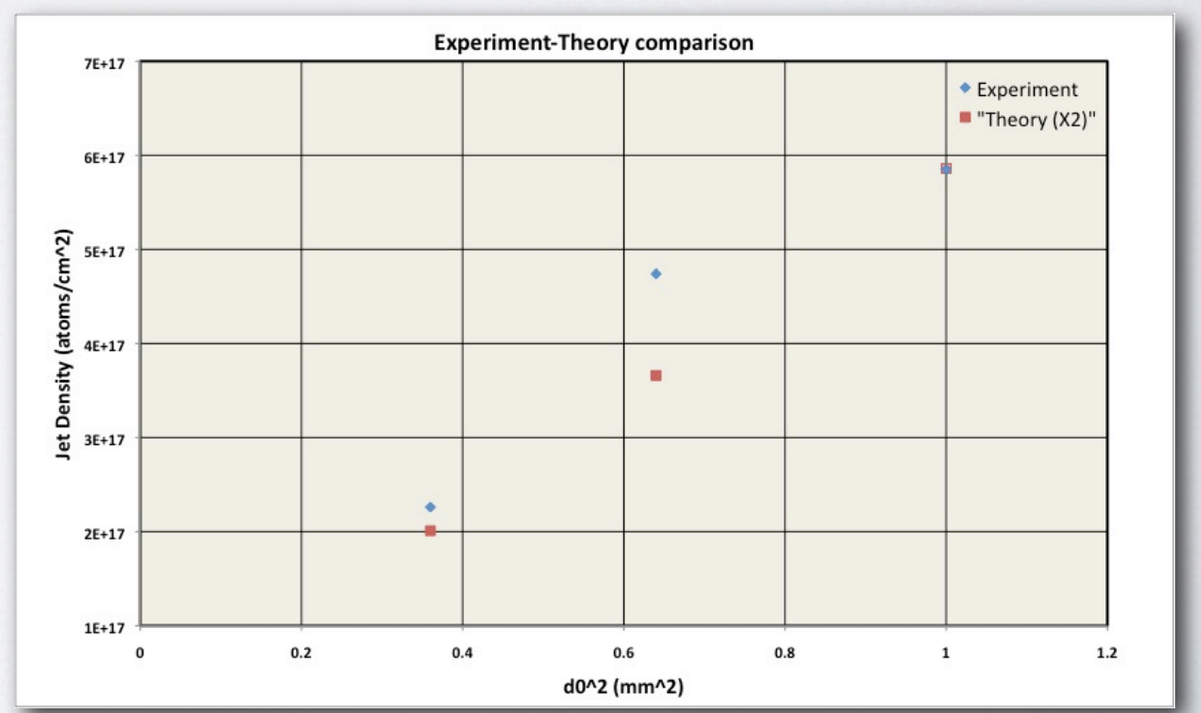

THANK YOU!!!

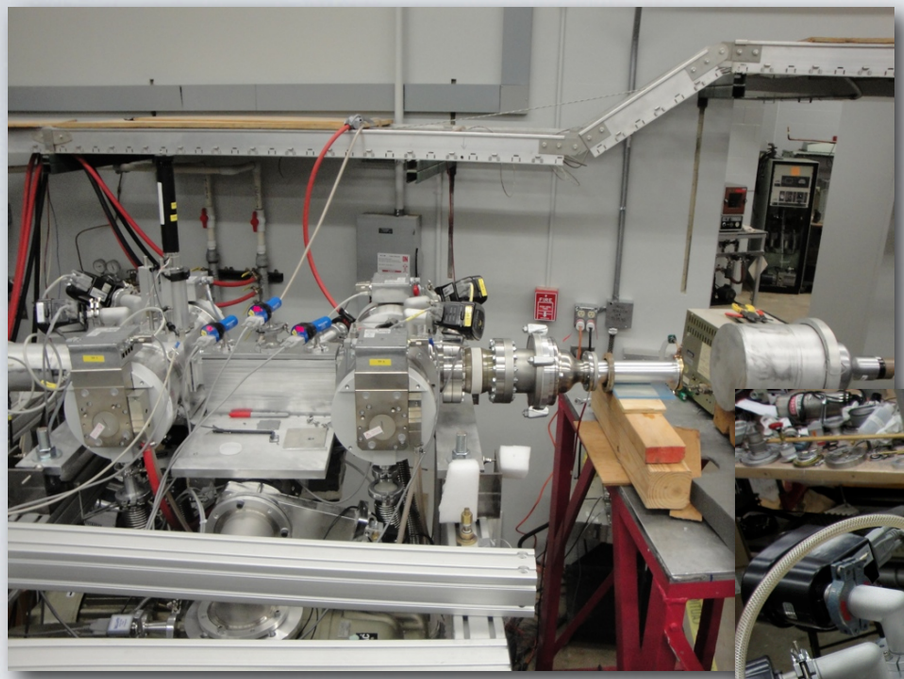

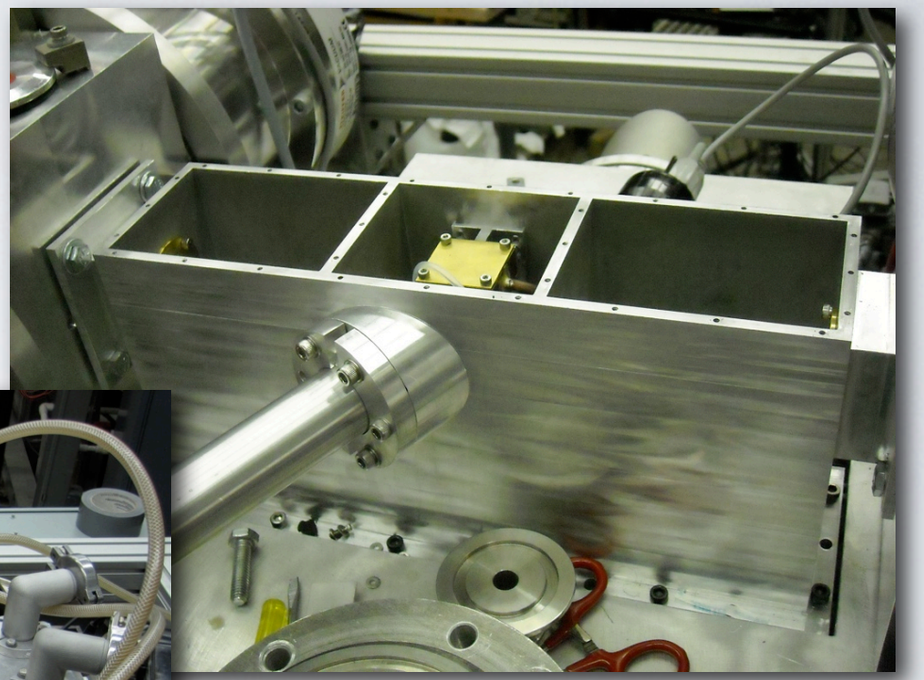

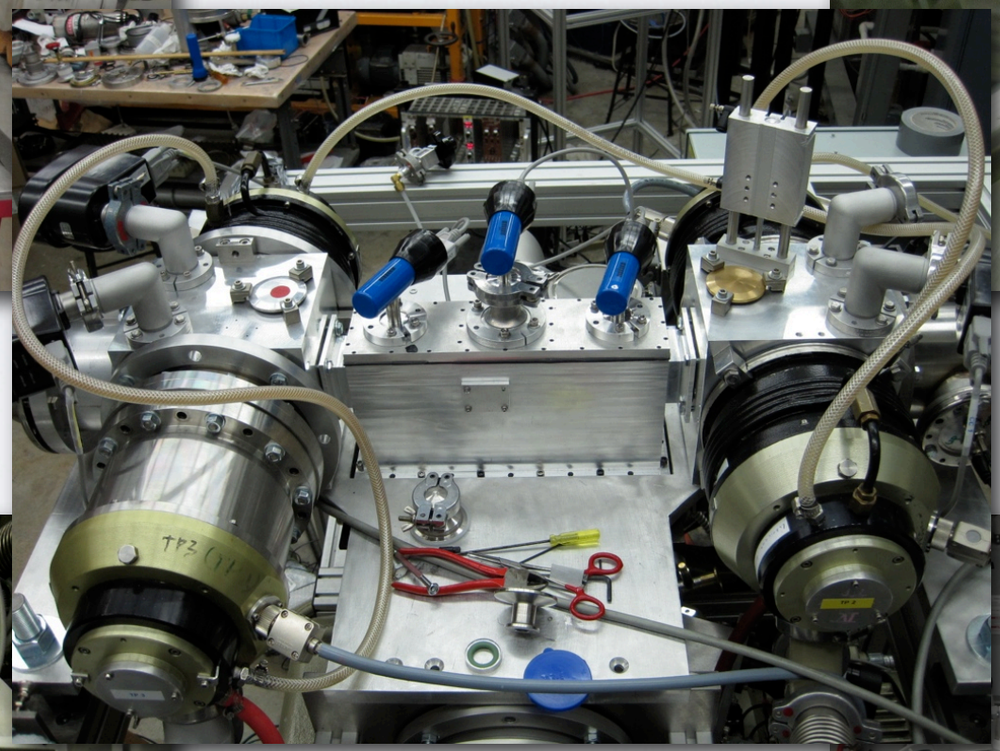

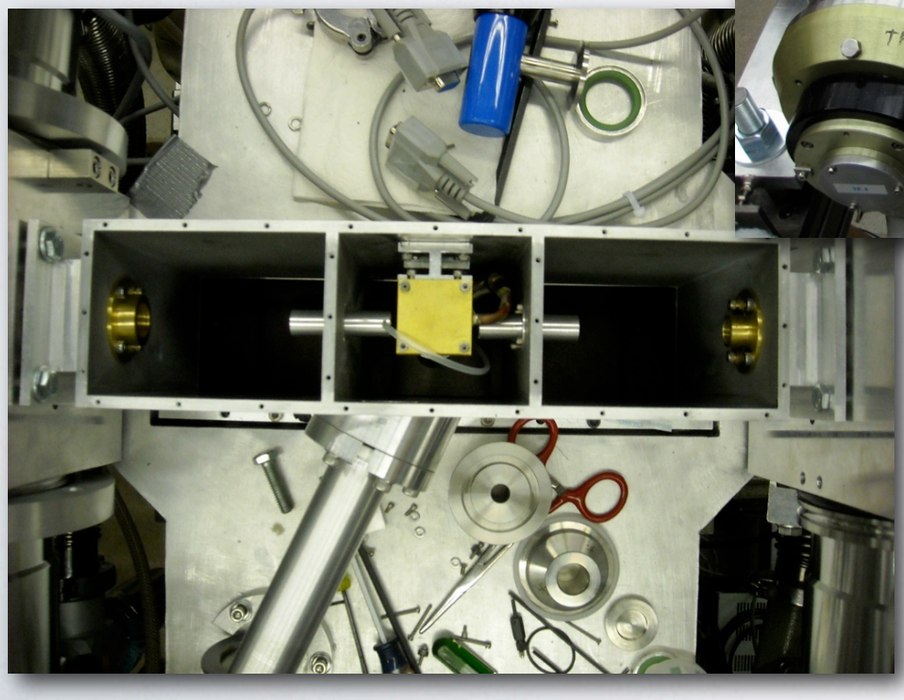

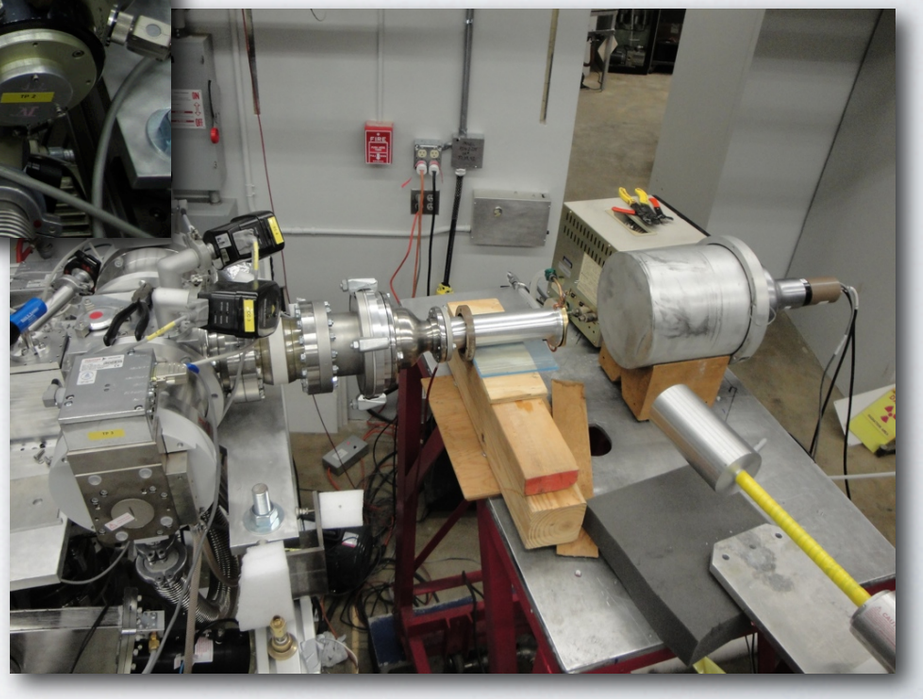

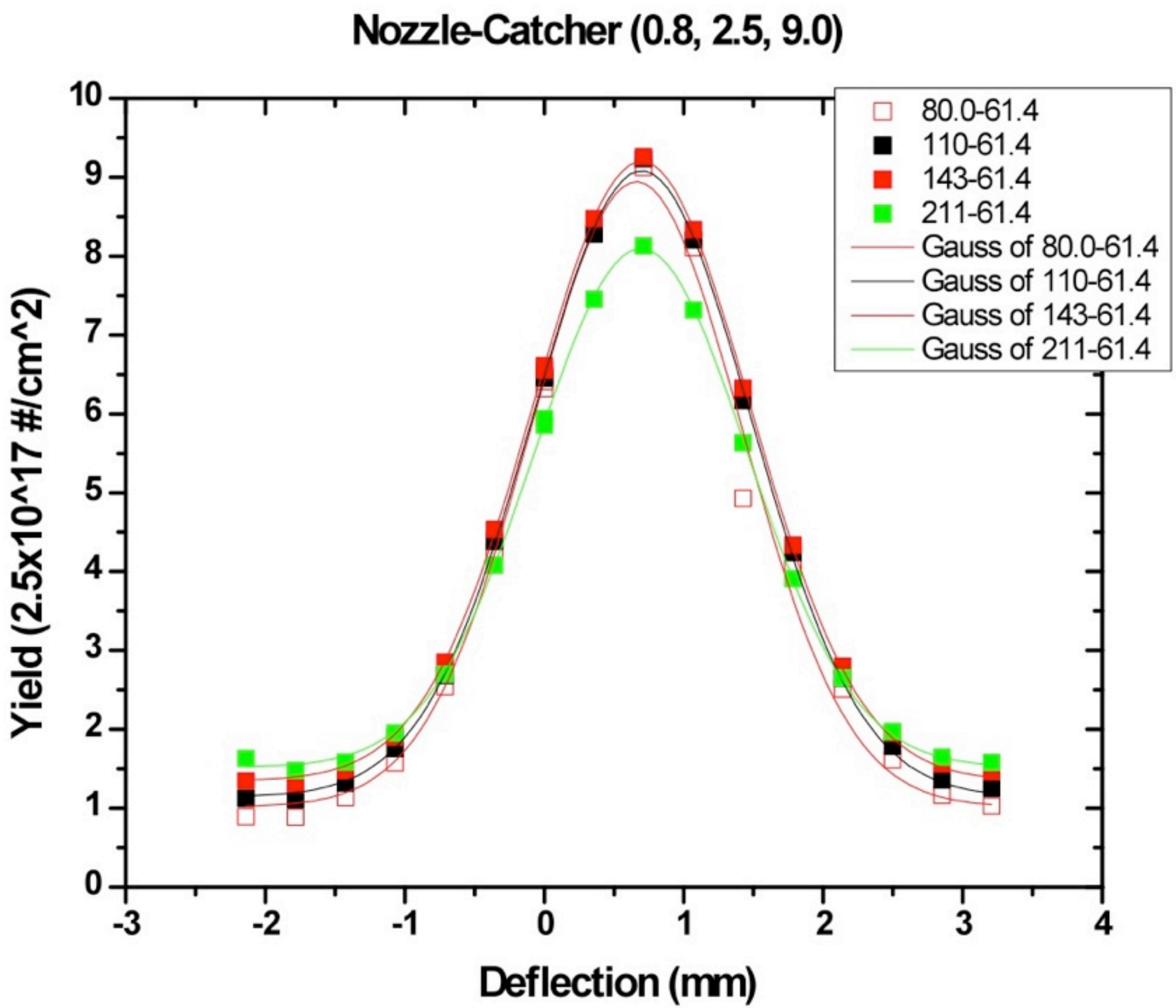
Nozzle-Catcher (0.8, 2.5, 9.0)
Yield (2.5x10^17 #/cm^2)
Deflection (mm)
80.0-61.4
110-61.4
143-61.4
211-61.4
Gauss of 80.0-61.4
Gauss of 110-61.4
Gauss of 143-61.4
Gauss of 211-61.4
0
1
2
3
4
5
6
7
8
9
10
-3
-2
-1
0
1
2
3
4

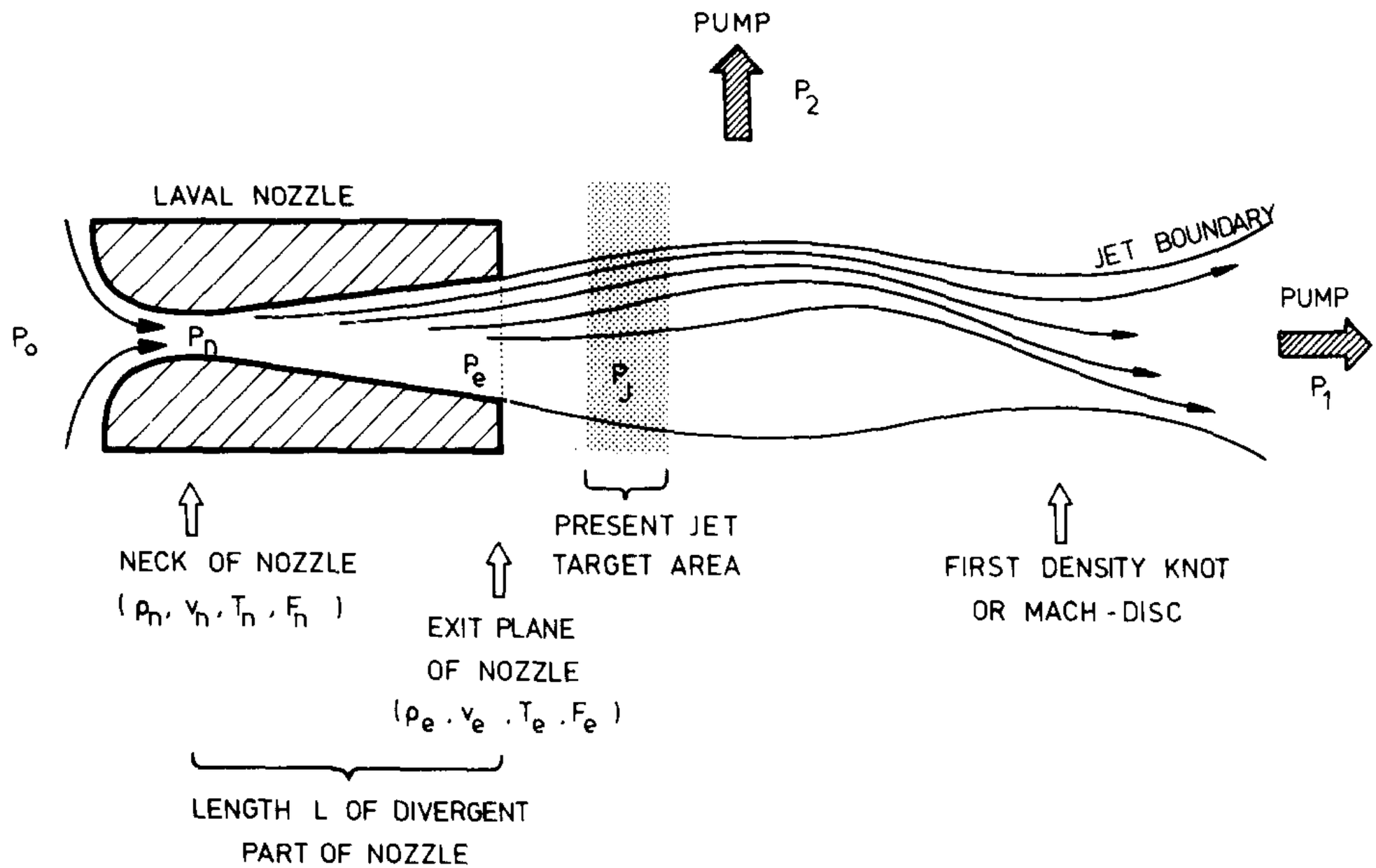
PUMP
P_2
LAVAL NOZZLE
JET BOUNDARY
PUMP
P_1
P_o
P_D
P_e
P_J
NECK OF NOZZLE
(ρ_n, v_n, T_n, F_n)
EXIT PLANE
OF NOZZLE
(ρ_e, v_e, T_e, F_e)
PRESENT JET
TARGET AREA
FIRST DENSITY KNOT
OR MACH-DISC
LENGTH L OF DIVERGENT
PART OF NOZZLE

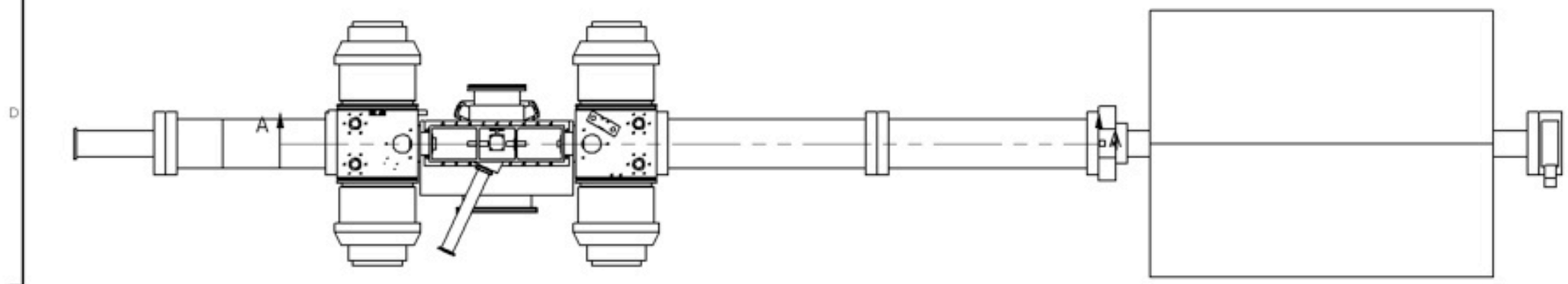

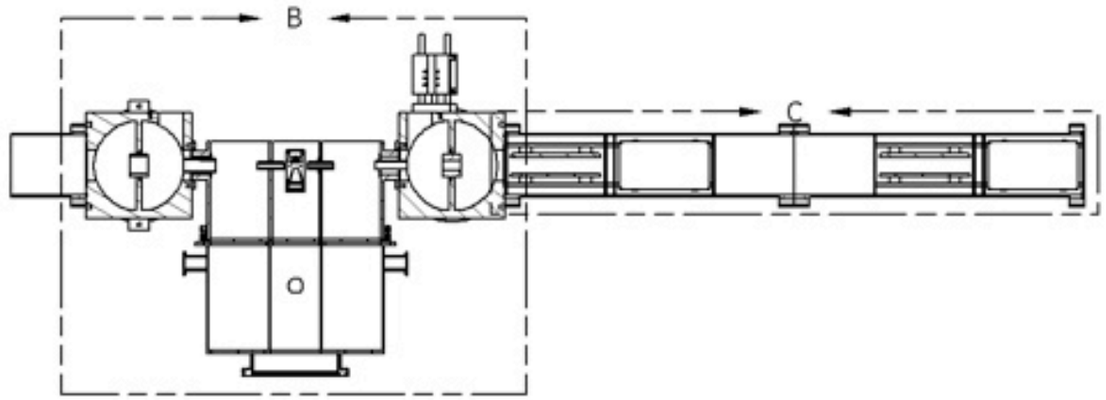

SECTION A-A
SCALE 0.14 : 1

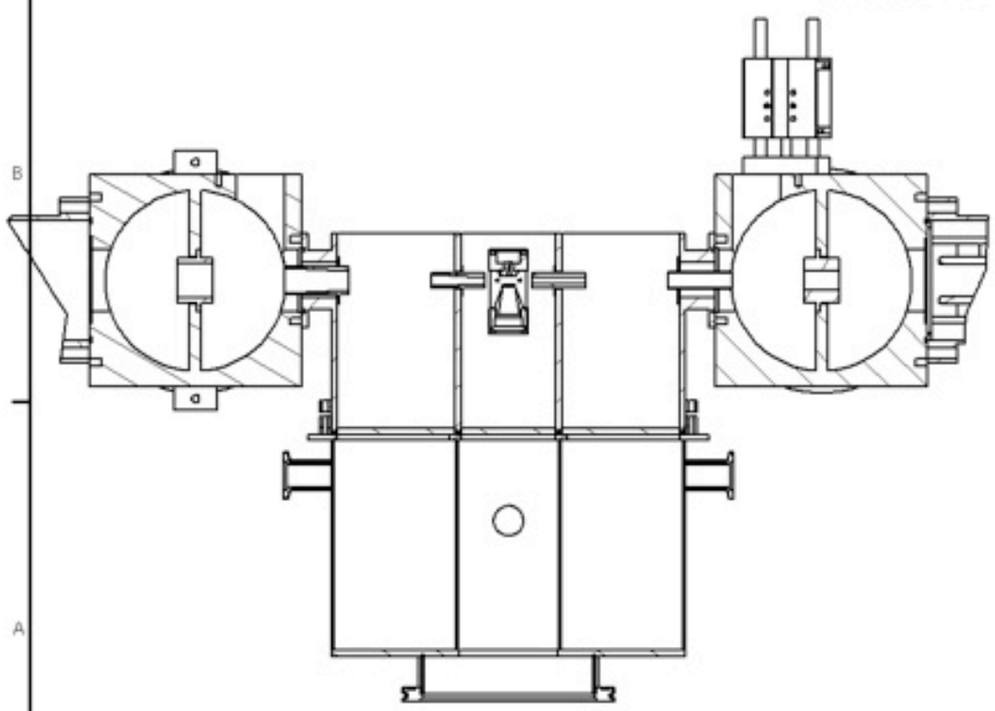

DETAIL B
SCALE 0.28 : 1

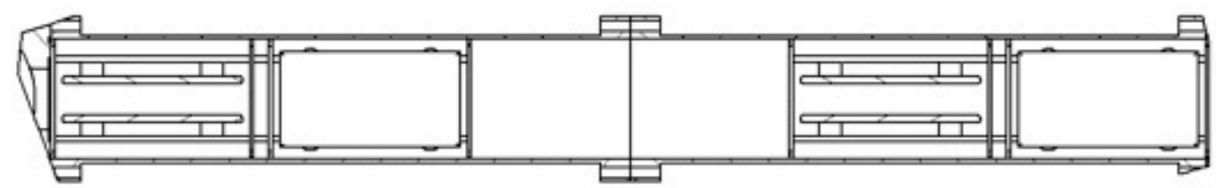

DETAIL C
SCALE 0.28 : 1

DRAWN akoritos	3/30/2010	
CHECKED		TITLE
QA		
MFG		
APPROVED		SIZE C / DWG NO Assembly_Beamline_after_wall / REV
		SCALE / SHEET 1 OF 1