A modern 15O(α,γ)19Ne reaction rate for X-ray burst models

Richard H. Cyburt
Michigan State University
National Superconducting Cyclotron Laboratory

Barry Davids
TRIUMF

- Models vs obs.
  - Agree well.....
  - But can do more....
- Reduce nuclear physics input uncertainties
  - Only a dozen or so reactions affect light curve predictions
    - Smith et al 2008
    - Parikh et al 2008
    - Amthor et al 2010

Heger et al (2007)

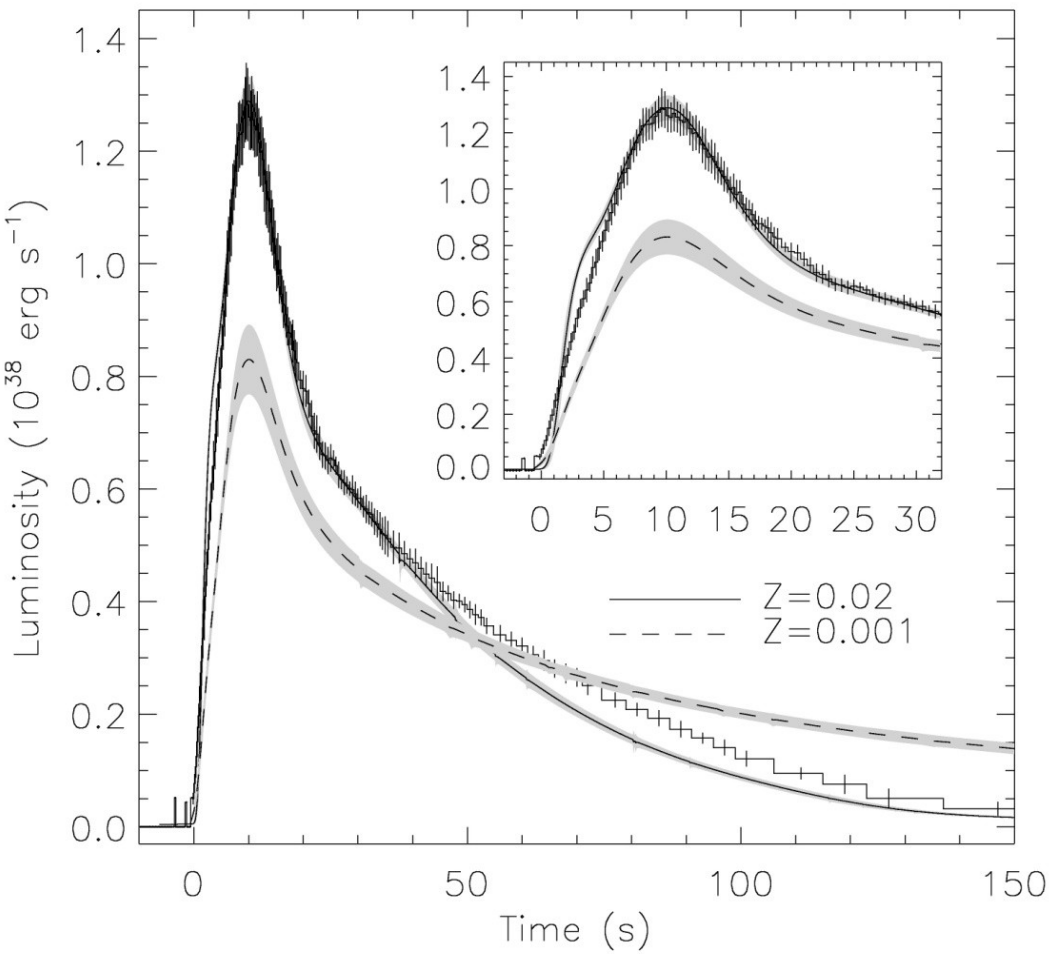

Hot CNO Cycle T>0.3 GK

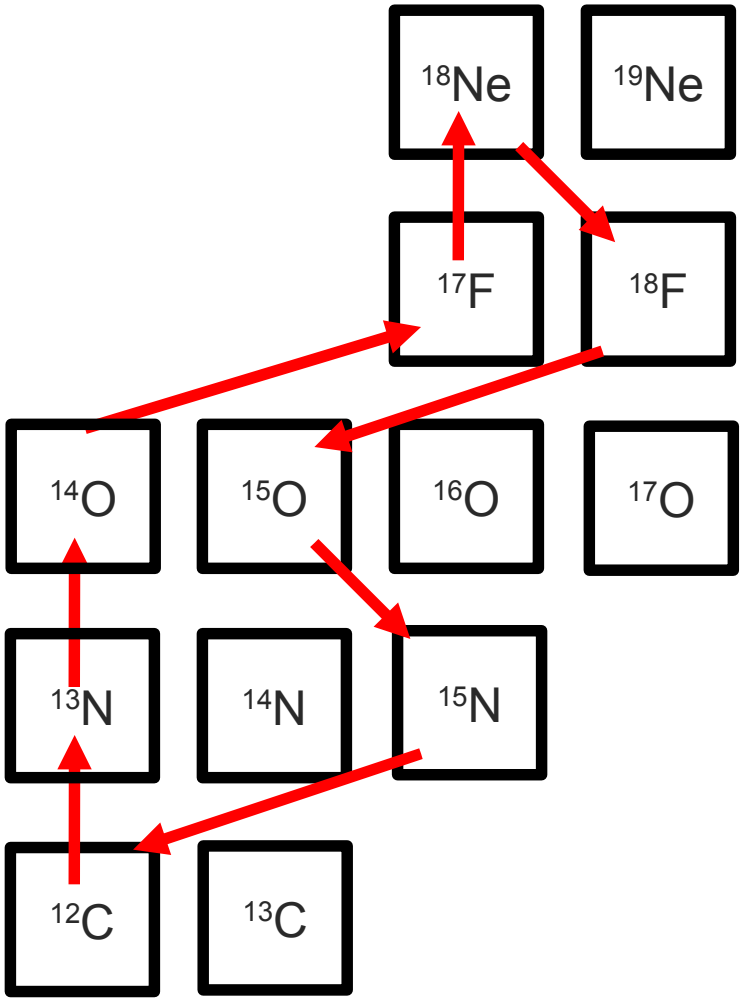

Hot CNO Cycle T>0.3 GK

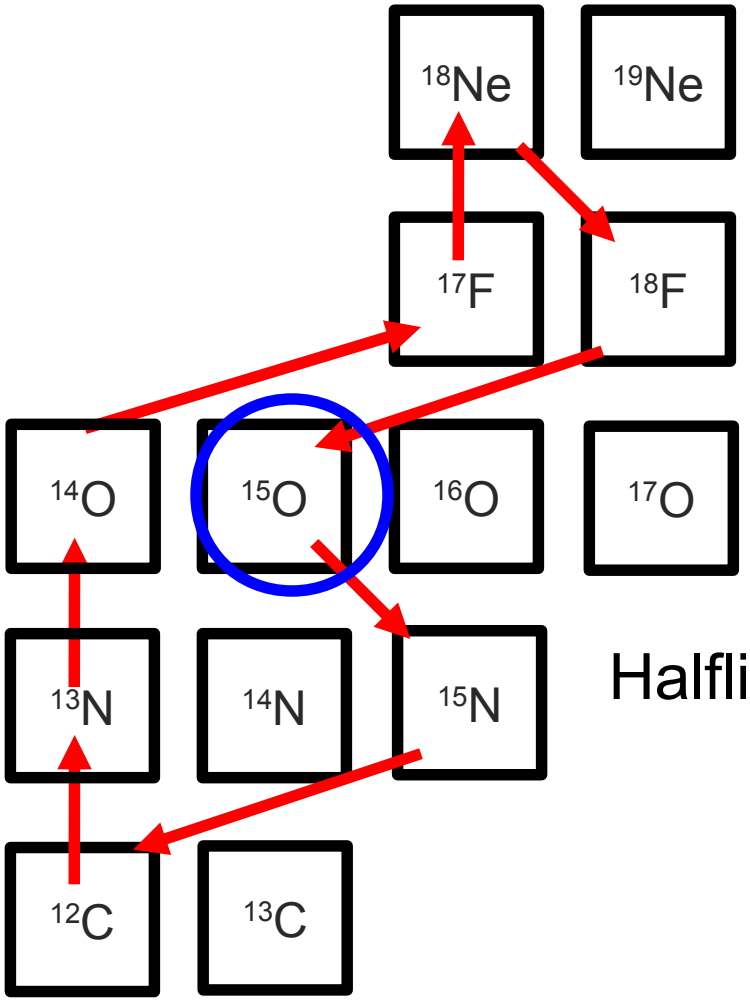

Halflife = 122 sec

Initial Breakout T>0.4 GK

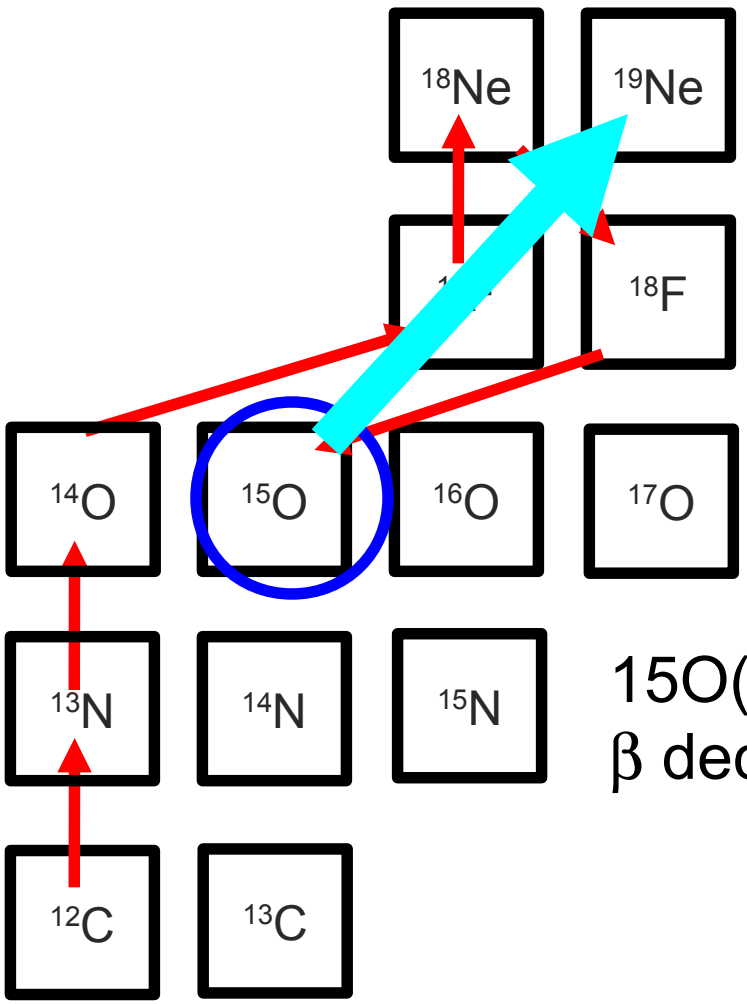

15O(α,γ) faster than β decay

- Resonance Reactions depend on:
  - Resonance spins/energies
  - Mean lifetimes
  - α branching ratios

- We Monte Carlo state properties
  - Adopt experimental data
    - Energies, lifetimes, B.R.
  - If data not available...estimate
    - R-matrix parametrization w/ estimated reduced width distribution

Mean Lifetime Measurements (femto-seconds)

Ex (keV)	Tan et al. 05	Kanungo et al 06	Mythili et al 08
1536	16 (4)		19.1 (+0.7 -0.6) (1.1)
4035	13 (+9 -6)	11 (+4 -3)	6.9 (1.5) (0.7)
4144	18 (+2 -3)		14.0 (+4.2 -4.0) (1.2)
4200	43 (+12 -9)		38 (+20 -10) (2)
4378	5 (+3 -2)		2.9 (1.5) (0.6)
4548	15 (+11 -5)		18.7 (+3.0 -2.6) (2.2)
4602	7 (+5 -4)		7.6 (+2.1 -2.0) (0.9)

Mean Lifetime distribution

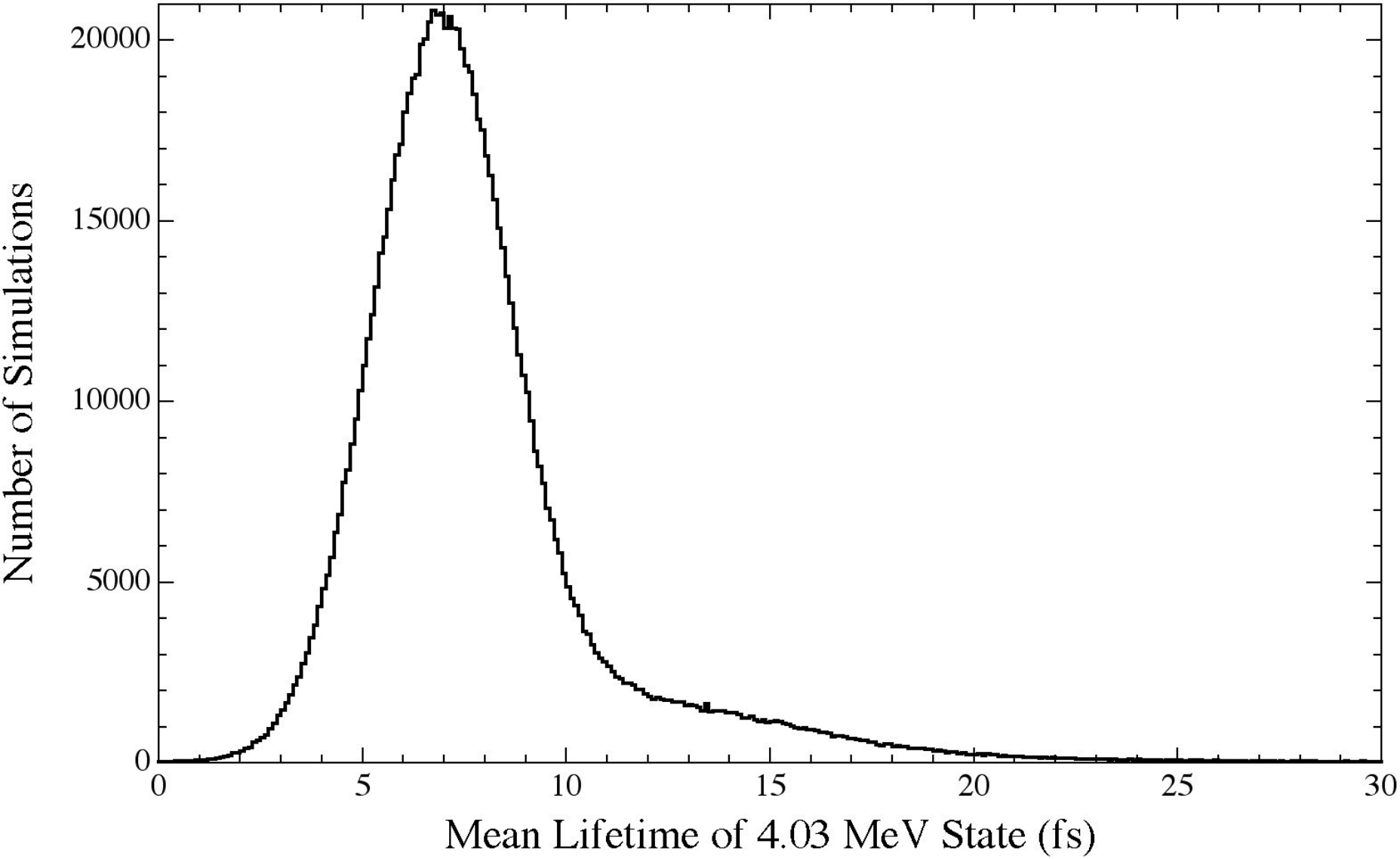

Branching Ratio distribution based on Davids et al 2003

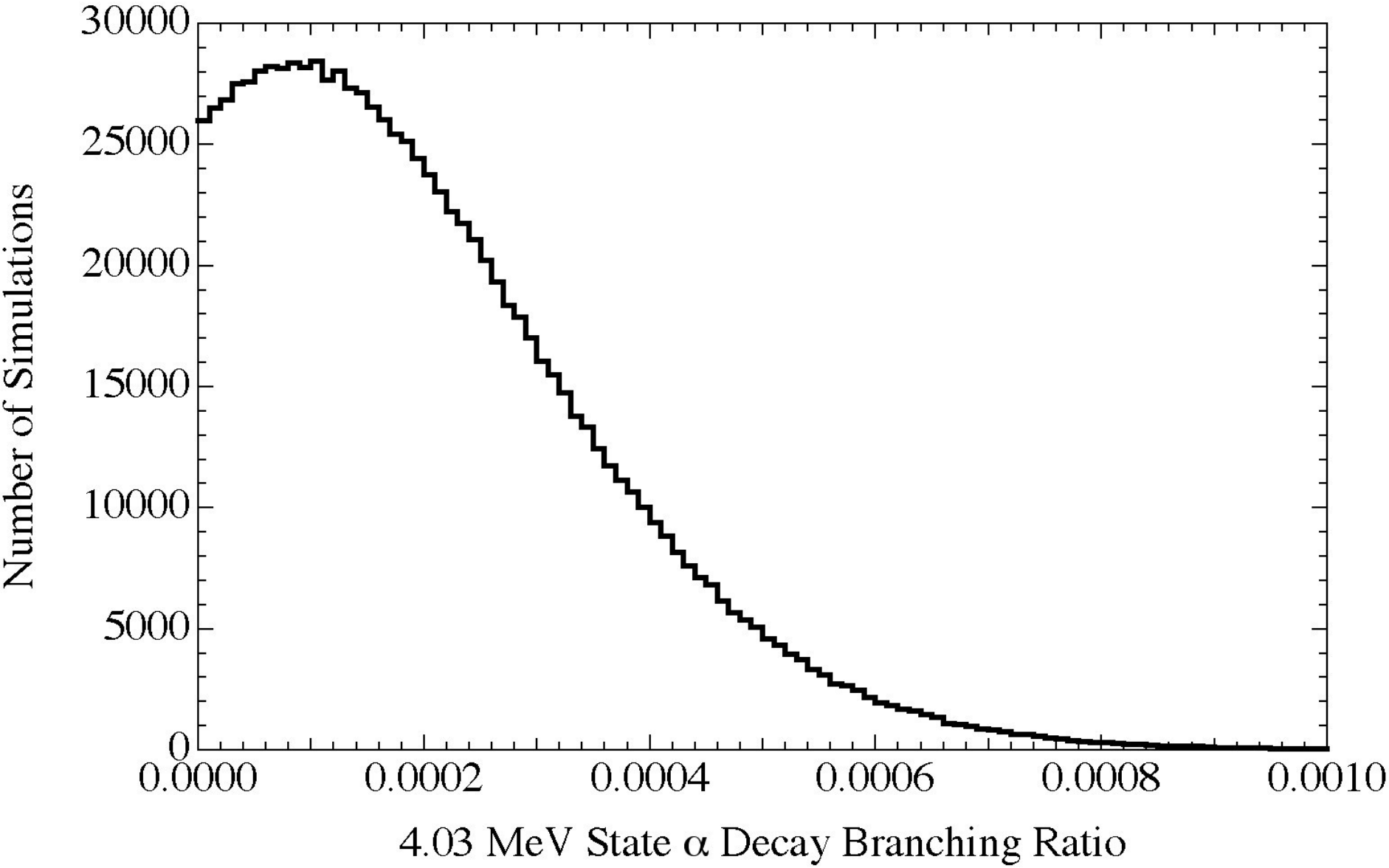

Branching Ratio distribution based on estimate

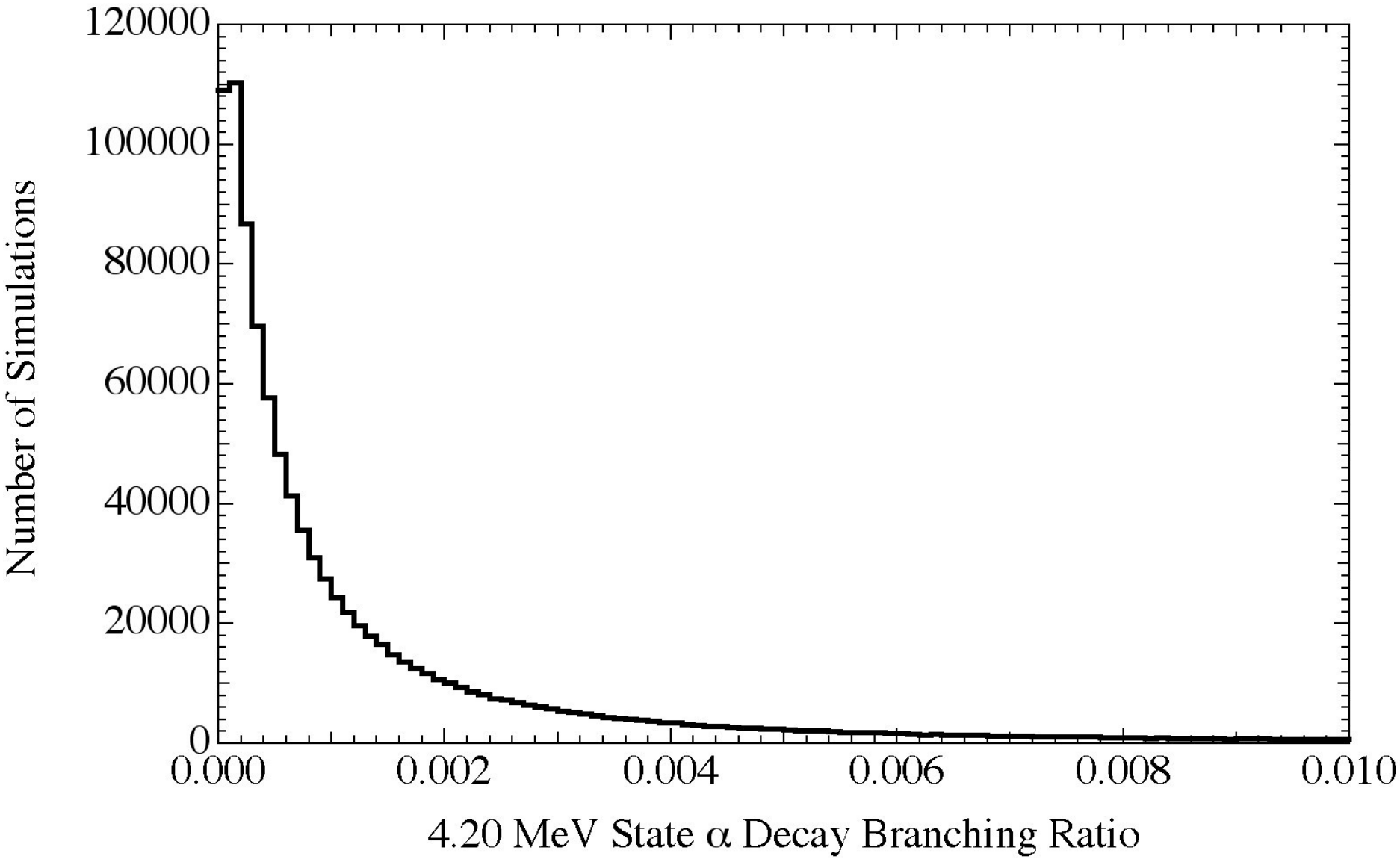

- Output
  - Thermonuclear rate distributions
  - Recommend median value
  - Present 3-σ central confidence limits

Reaction Rate median and 3-σ errorband

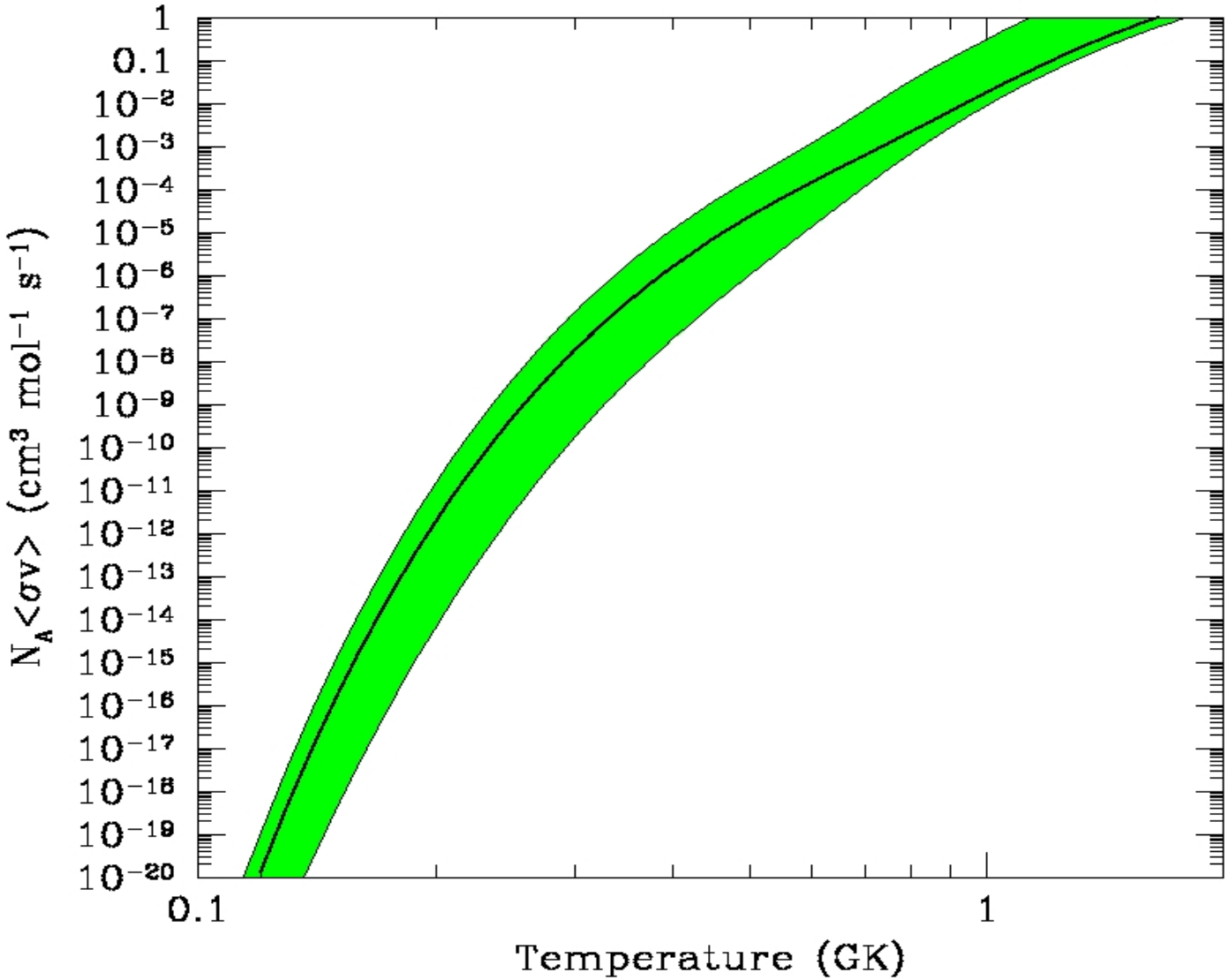

Reaction Rate median and 3-σ errorband relative to cf88

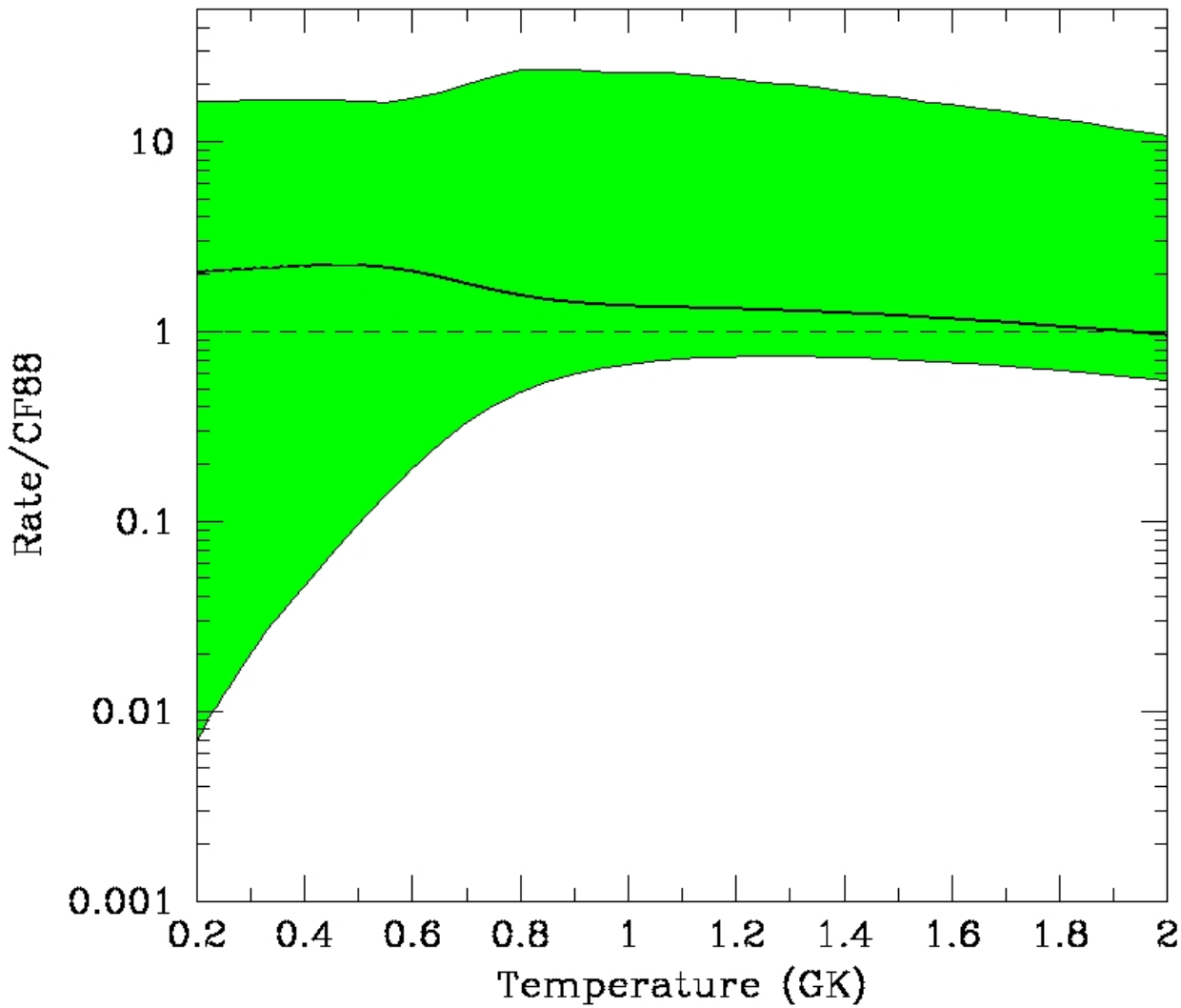

Reaction Rate median and 3-σ errorband relative to Fisker

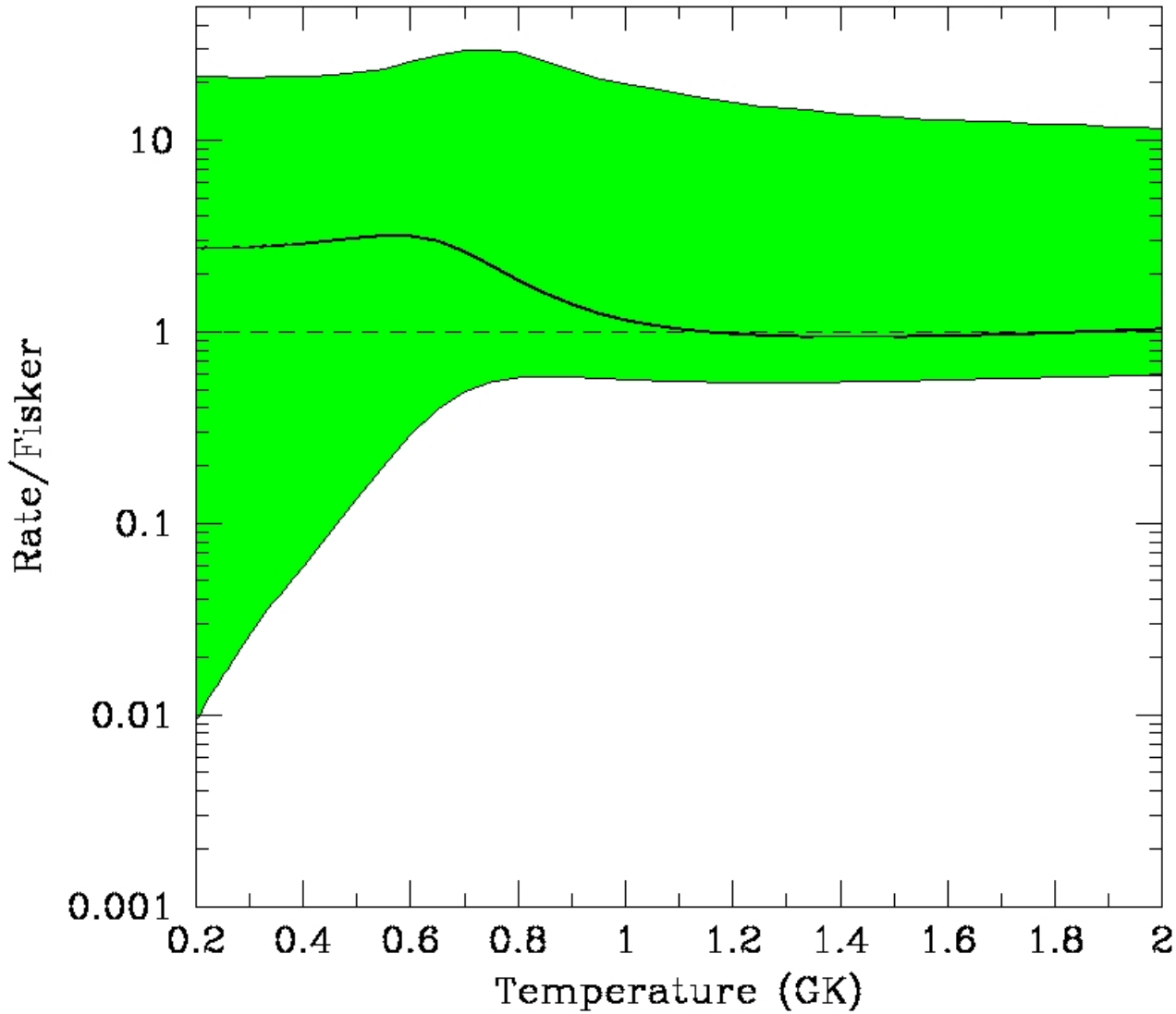

Conclusions

- New Rate agrees well with previous results
- One must be careful when comparing errors (1-σ vs 3-σ)
- 4.14 & 4.20 states not very important to rate
- Within uncertainties, rate still affects light curve predictions.
- More work needed!!

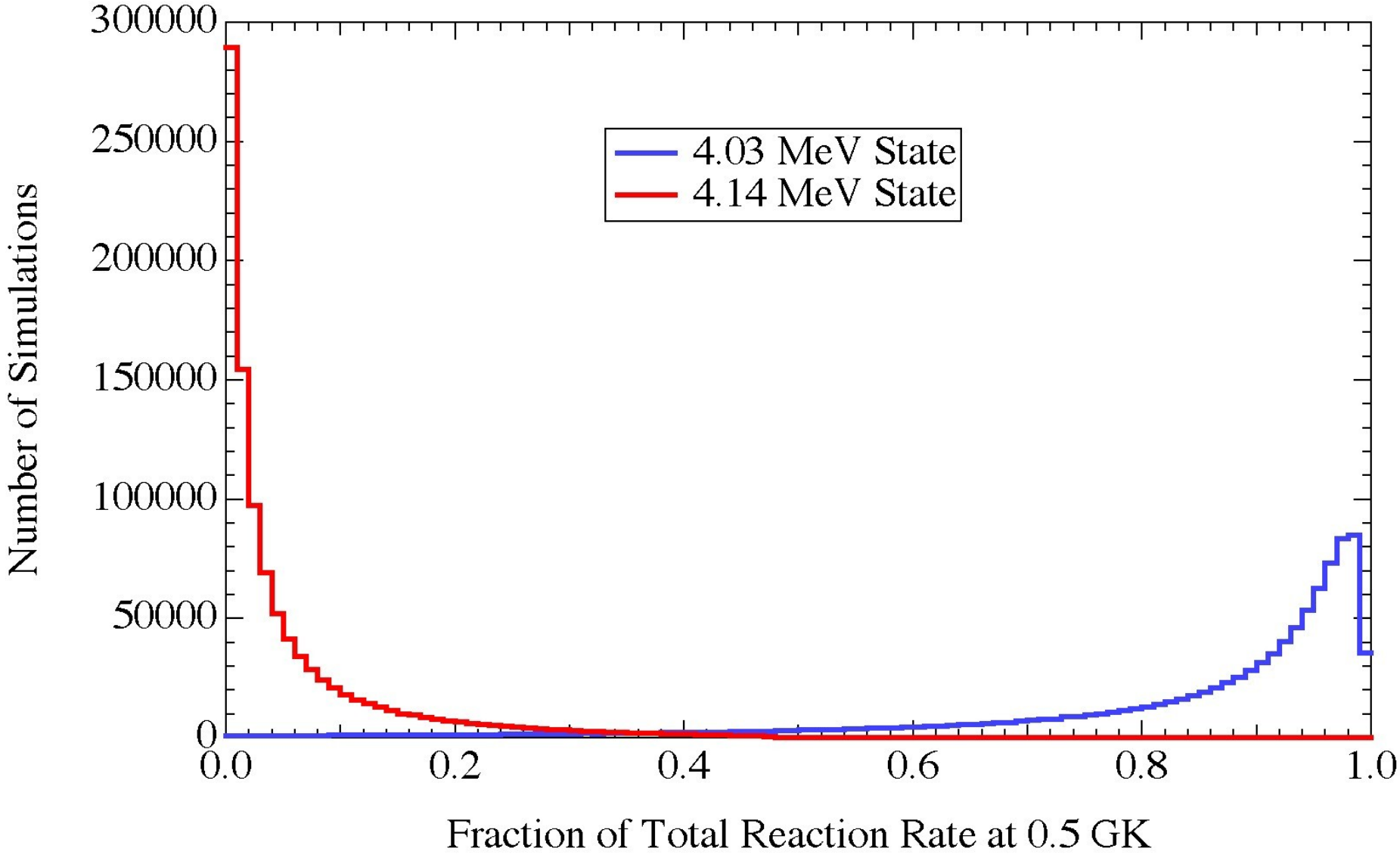
4.03 MeV State
4.14 MeV State
Number of Simulations
300000
250000
200000
150000
100000
50000
0
0.0
0.2
0.4
0.6
0.8
1.0
Fraction of Total Reaction Rate at 0.5 GK